D.E

ESO Workshop: Coating and Cleaning Large Mirrors

ESO Headquarters
Karl-Schwarzschildstraße 2
8046 Garching
Germany

7 and 8 October 1991

A collection of contributed papers

List of Participants at ESO Workshop:
Cleaning and Coating Large Mirrors, 7 and 8 October 1991

Participant	Affiliation/Project
A. Abraham	Gemini 8m Telescope, USA
P. Alvarez	Instituto de Astrofisica de Canarias, E
B. Atwood	Columbus Project, USA
K. Birkle	Max-Planck-Institut für Astronomie, D
D. Cowley	Canada-France-Hawaii Telescope
C. Del Vecchio	Arcetri Obs., Florence, I
A. Gilliotte	ESO La Silla
T. Gregory	Canada-France-Hawaii Telescope
N. Itoh	Japanese National Large Telescope
M. Iye	Japanese National Large Telescope
D. Jackson	Royal Greenwich Observatory, UK
K. Kissel	AMOS/MOTIF Observatory, USA
B. Mack	Royal Greenwich Observatory, UK
M. Maars	Magellan Project, USA
L. Miglietta	Arcetri Obs., Florence, I
J. Montesinos	Instituto de Astrofisica de Canarias, E
M. Nakagiri	Japanese National Large Telescope
H. Nicklas	Uni-Sternwarte Göttingen, D
F. Perez	Carnegie Obs., Pasadena USA
H. Petrie	Palomar Obs., Caltech USA
K. Raybould	Gemini 8m Telescope, USA
P. Salinari	Arcetri Obs., Florence, I
V. Sanchez	Instituto de Astrofisica de Canarias, E
A. Schier	Carnegie Obs., Pasadena USA
J. Sovka	Canada-France-Hawaii Telescope
R. Thicksten	Palomar Obs., Caltech USA
J. Williams	MMT/University of Arizona USA
R. Wolf	Max-Planck-Institut für Astronomie, D
S. Worswick	Royal Greenwich Observatory, UK

Summary and Presentation of Current Practice and Experience in Washing and Coating (Primary) Mirrors at existing Observatories

Contents:

Calar Alto

Presentation by
K. Birkle

ESO Workshop: Coating and Cleaning Large Mirrors

Standard Procedures of Mirror Coating at Calar Alto Observatory

K. Birkle, R. Wolf, G. Lingenfelder
Max-Planck-Institut für Astronomie, Heidelberg

Telescopes of the MPI für Astronomie at Calar Alto Observatory: 1.2 m RC, 2.2 m RC/Coudé, 3.5 m Prime/RC/Coudé, 0.8/1.2 m Schmidt.
In addition, a 1.5 m RC/Coudé is operated by the Instituto de Astrofisica de Andalucia, Granada.

The MPI für Astronomie has installed two aluminization plants: (1) vacuum chamber of 2.6 m in diameter located at the 2.2 m telescope building (Fig. 1); (2) since 1983 with completion of the 3.5 m telescope a 4 m vacuum tank at the 3.5 m building (Figs. 2 - 4).

Mirror Handling for Re-coating

In a series of illustrations (Figs. 5 - 12) the mirror handling is demonstrated. The whole procedure, in particular aluminizing is carried out with the (primary) mirrors in horizontal position.
For dismounting the mirror cell and lateron attaching it to the telescope again a cart on a hydraulic platform is lifted underneath the cell (Fig. 5). Beside the telescope, after protecting the mirror with a cover, the mirror is removed from its cell with the dome crane (Fig. 6) and lowered through the building to the ground floor.
In the metallization plant, with separate crane properly screened to prevent grease or oil to drop from the crane onto the mirror, the mirror is lifted for washing into a tub made up of glass fibre reinforced plastic and from there after cleaning into the lower part of the vacuum chamber (Figs. 8, 9).
At the 3.5 m telescope, instead of a washing tub a three-legged bench of stainless steel is used (Fig. 10). By this, cleaning liquids freely flow to the drain in the floor.
The central support for lifting the mirror, which remains inside the vacuum tank during aluminization, is made up of stainless steel. It is different from the radial definition support of the mirror inside the mirror cell and has to be interchanged with the latter before washing and before re-assembling the mirror in its cell, respectively.

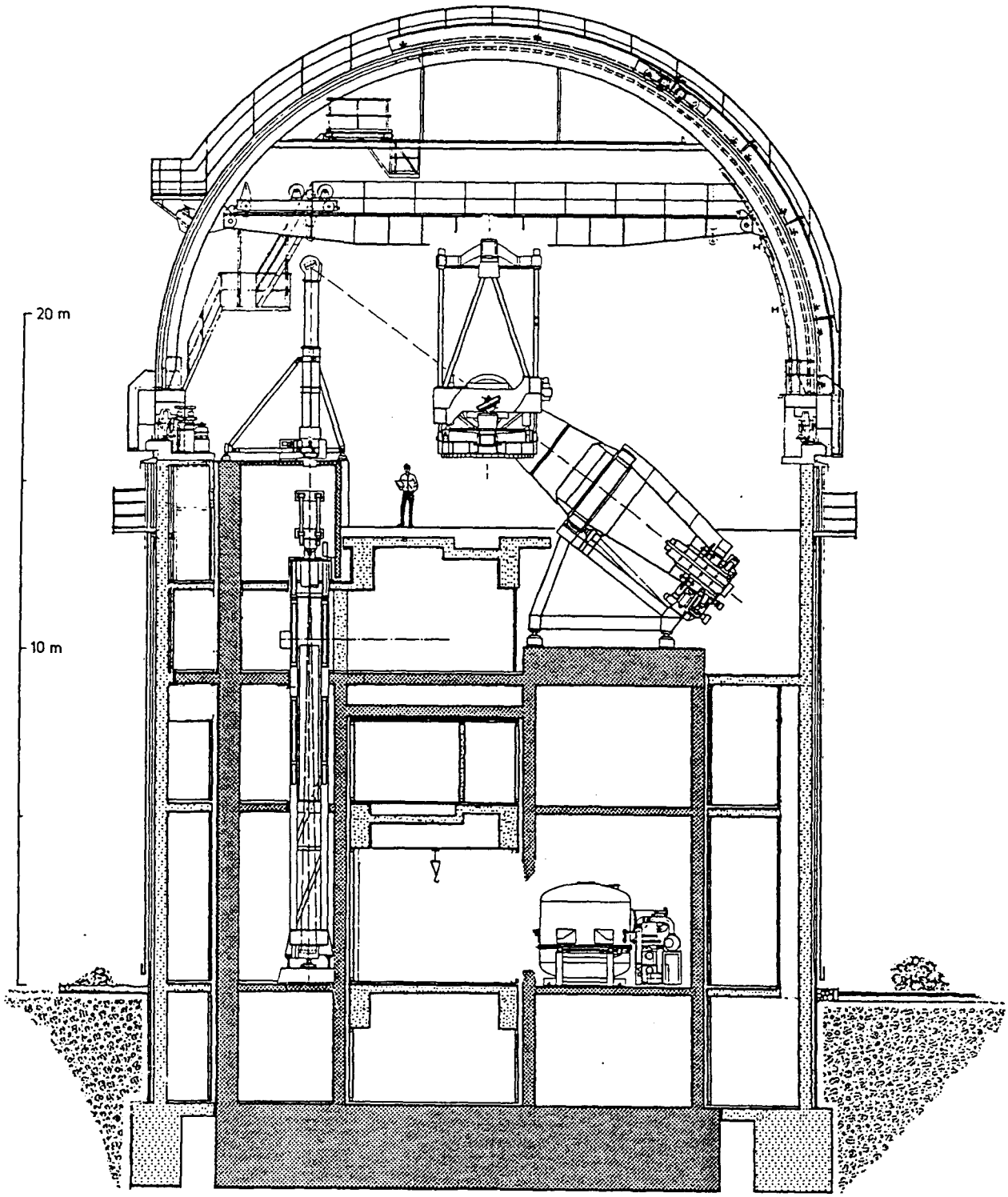

Fig. 1. N-S sectional drawing of the 2.2 m telescope building. Aluminization chamber (2.6 m diameter) on the ground floor. Vertical coudé spectrograph at left (northern side of building).

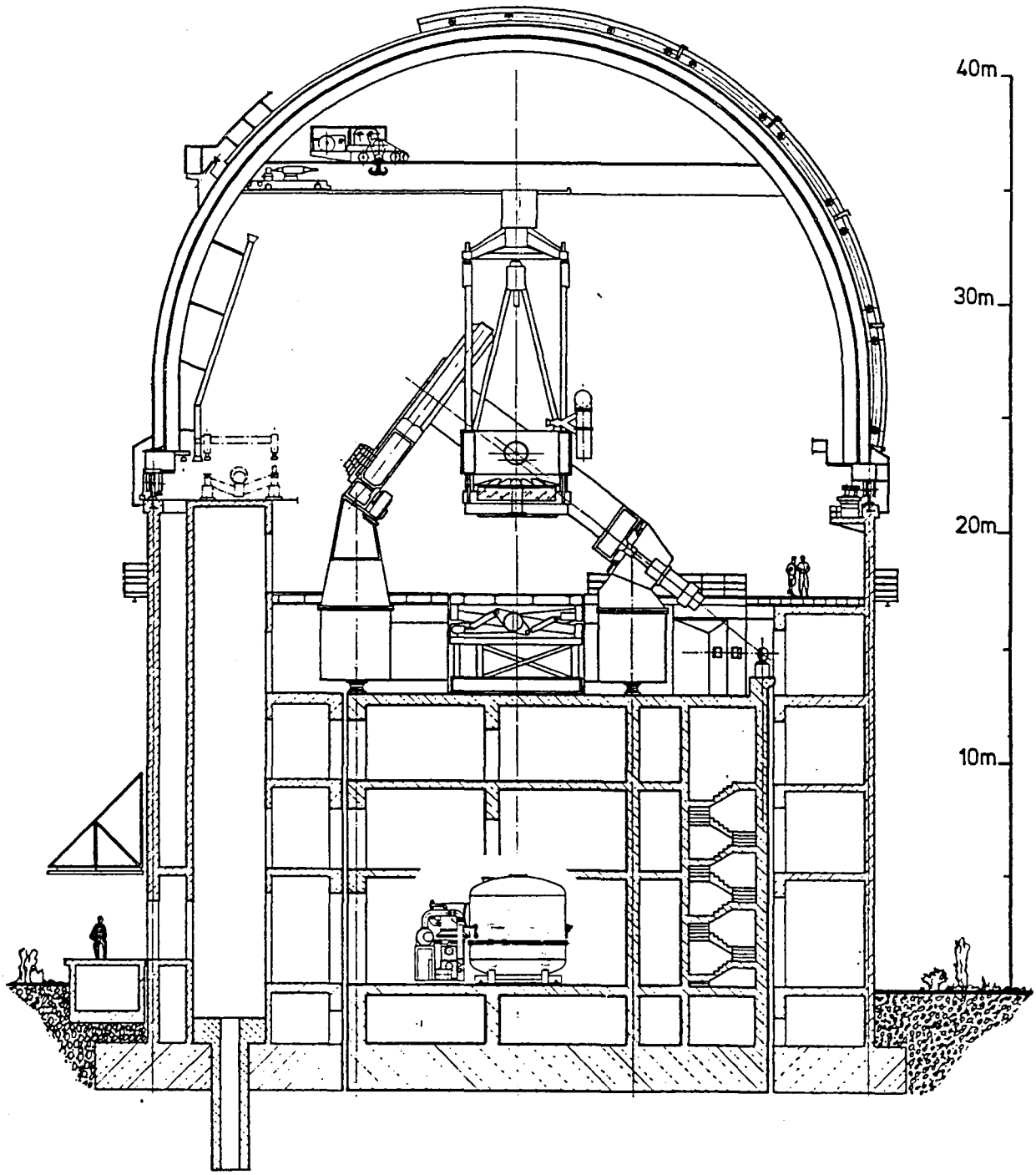

Fig. 2. N-S sectional drawing of the 3.5 m telescope building.
Below the telescope a 35 ton hydraulic platform for mounting cassegrain focus instruments and for disassembly of the mirror cell. The aluminization chamber (4 m diameter) is located on ground floor.

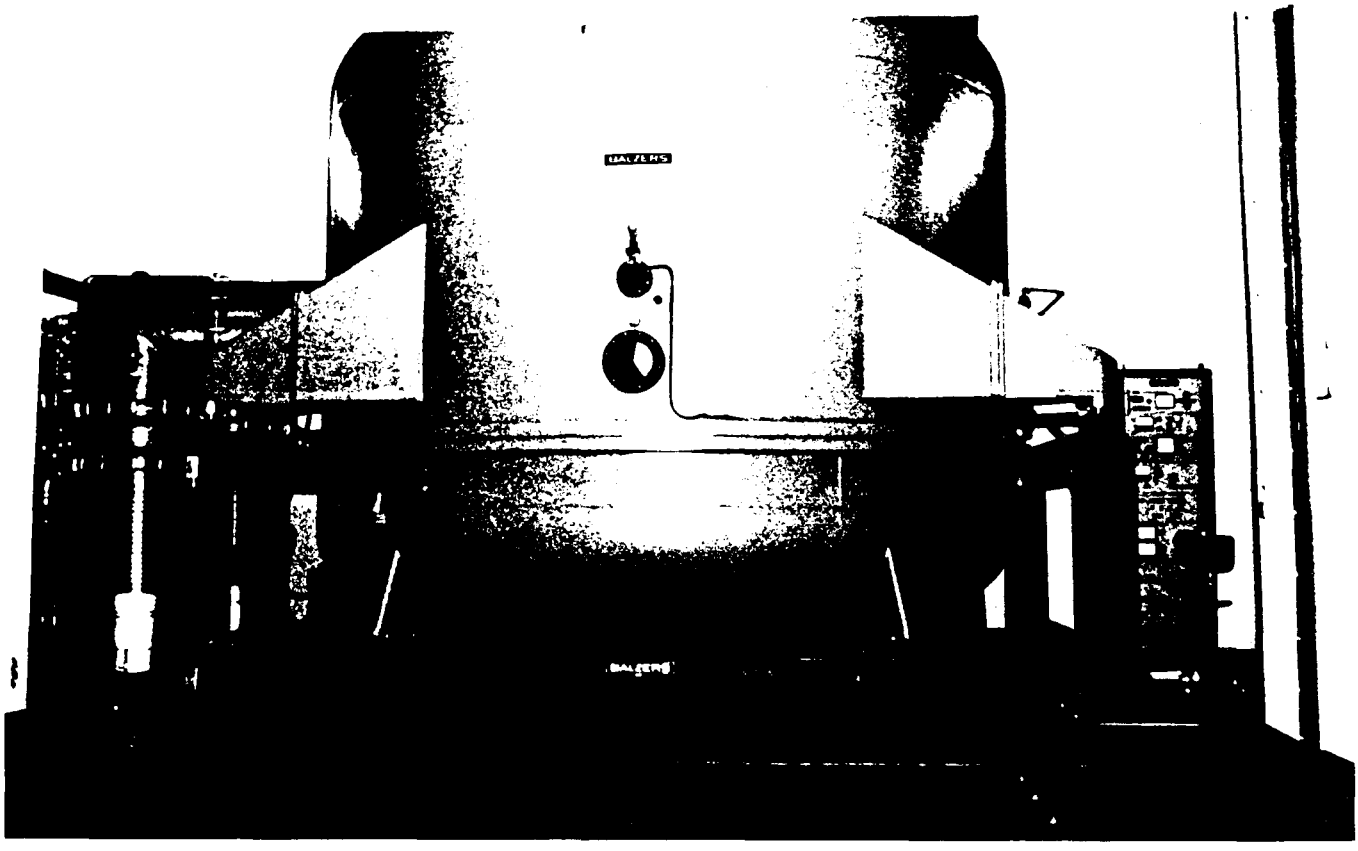

Fig. 3. The 4 m vacuum chamber; at the right the electronic rack for complete control of pumping, cooling, glow discharge and filament firing.
In the foreground at right and left of the vessel 2 of the 4 mechanical supports for lifting the upper part of the chamber, so that the lower part can be moved horizontally.

In the vaccum chamber, it is important for mirrors of different thickness to keep their optical surfaces at the same level to an accuracy of about ± 5 cm for reasons of homogeneity of the aluminium film depositing on the mirror surface during evaporation (Fig. 11).
There is only one step in mirror handling which needs special care because of increased risk of mirror damage (only in case of the 2.2 m mirror): Connecting the mirror baffle with the central radial definition support (Fig. 12) shortly before the newly coated mirror in its cell is attached again to the telescope,

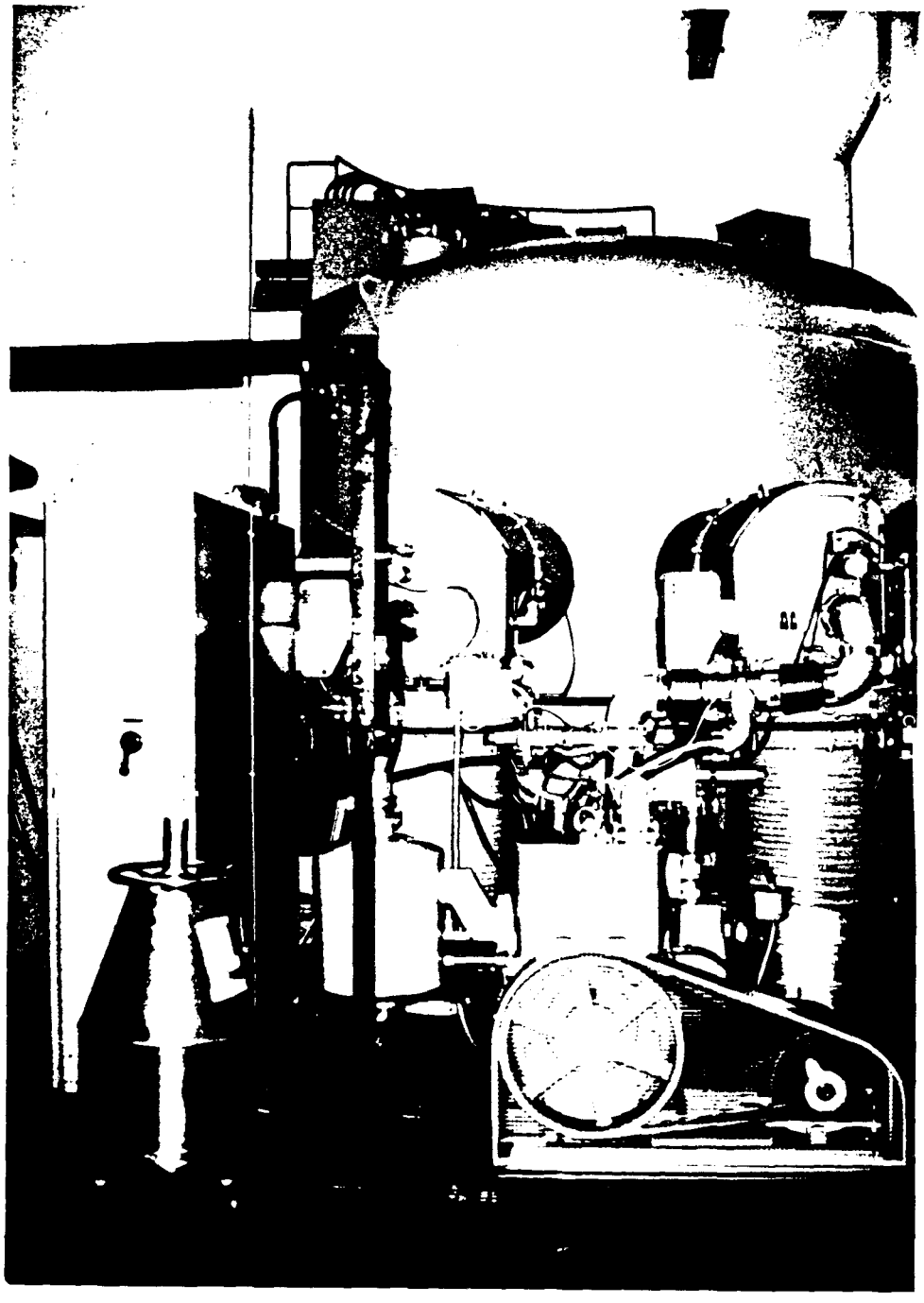

Fig. 4. Side view of the 4 m aluminization chamber with the twin oil diffusion pumping station; in the foreground the rotary vane pump, the roots pump is not visible.

as this can only be done after removal of the mirror protecting cover. The same holds for the reverse procedure after dismounting the mirror cell. The construction of another cover to avoid this problem was not possible because

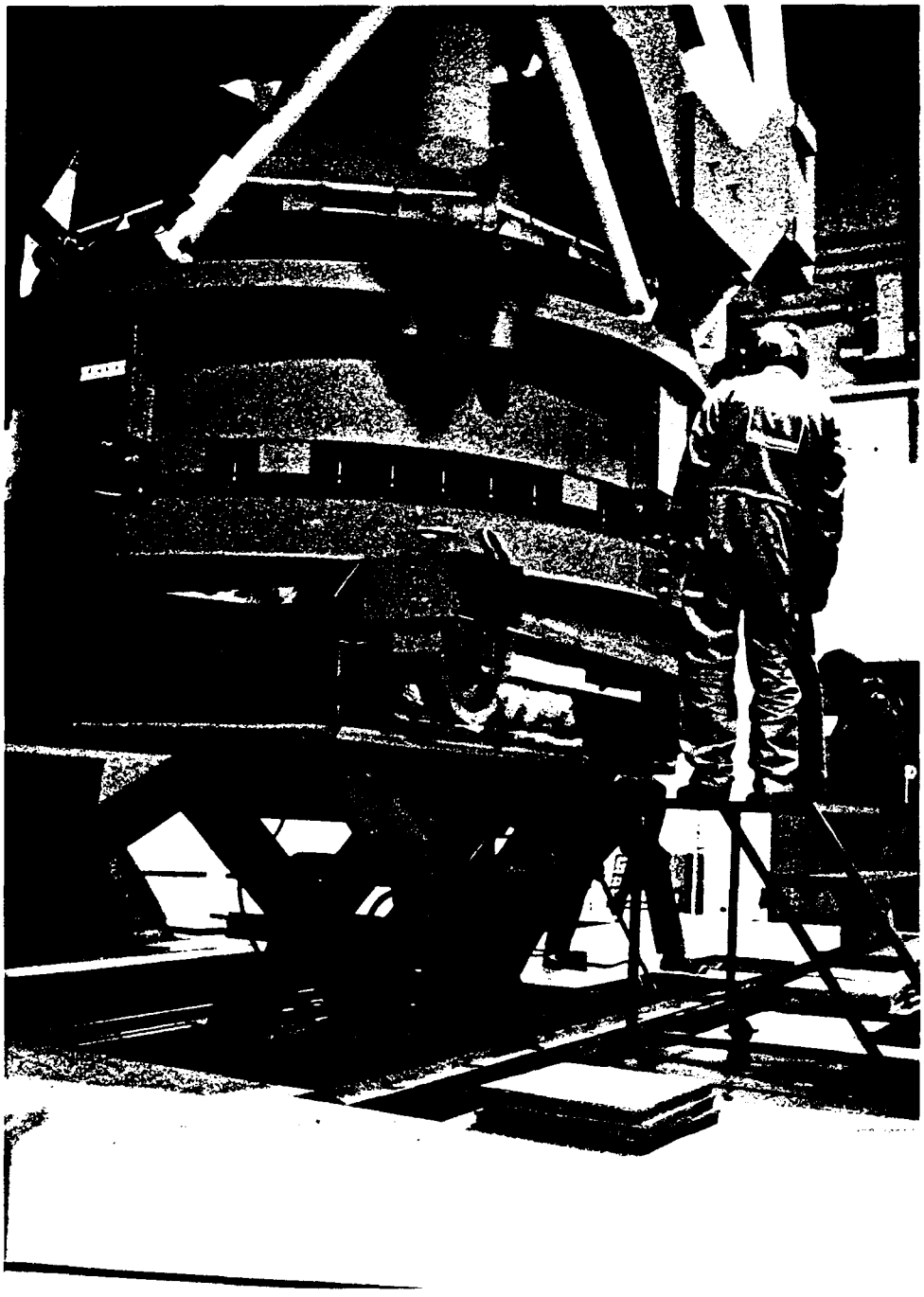

Fig. 5. Disassembly of the 2.2 m mirror cell using a transfer cart on a hydraulic platform.

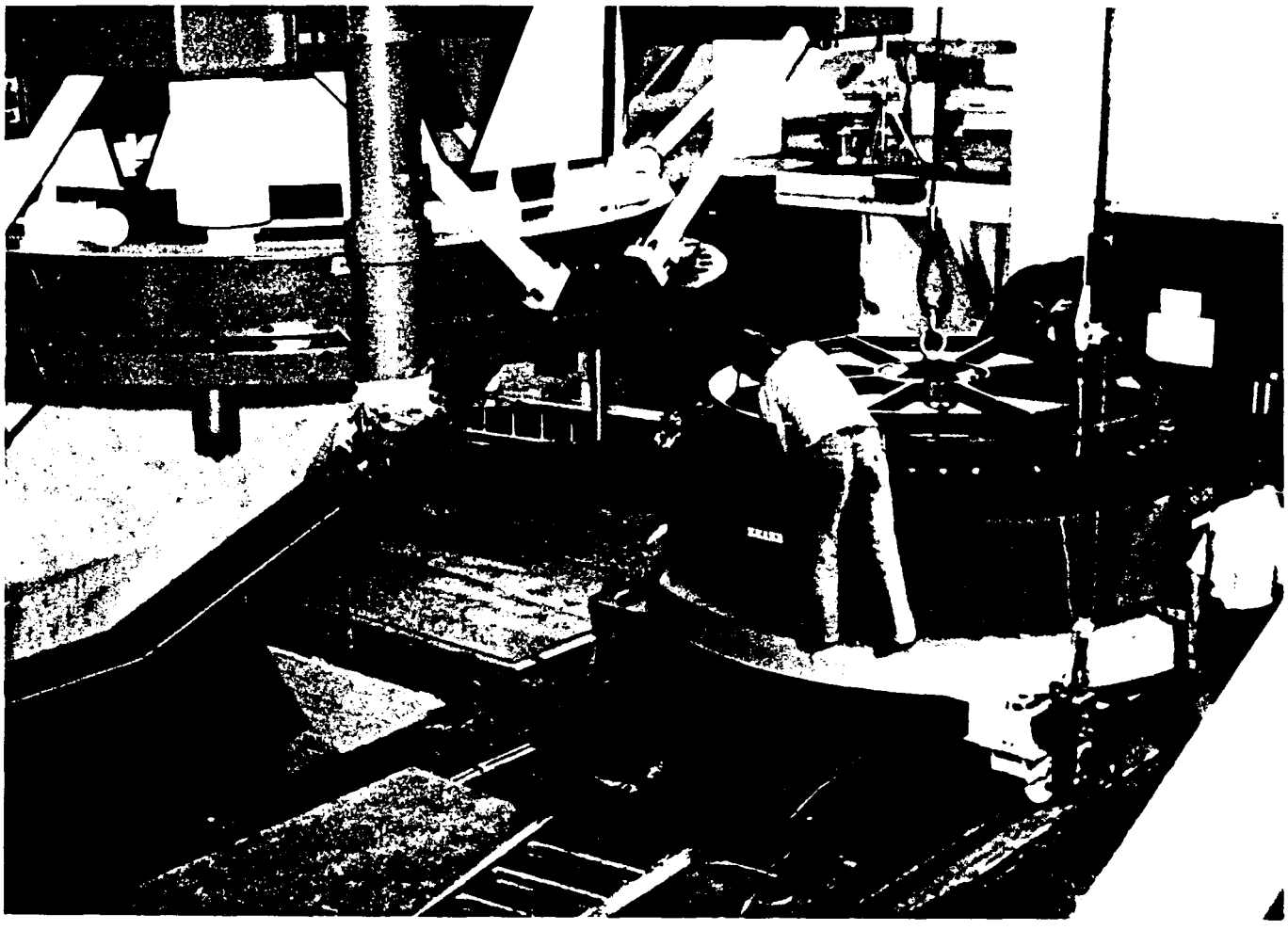

Fig. 6. Before the mirror is taken out of its cell, the mirror surface is protected by a cover.

of the special geometry of the baffle. To avoid this risk at the 3.5 m telescope the construction of the corresponding parts is completely different there. All other steps of mirror handling are considered to be of no special risk when carried out with normal care. For example, crane operations with the mirror are of no risk even in the case of the 14 ton 3.5 m primary, as accelerations are kept small (< 0.1 g) when starting and ending crane motion at slow-speed; due to elastic stretching of the twisted wire cables acceleration forces are also damped.

Normally, re-coating the primary means that the telescope is out of operation for one night. When dismounting the mirror cell begins in the morning of the first day, the telescope is operational again in the evening of the second day.

About 5 persons are needed for mechanical work. Mirror cleaning, preparation of the vacuum chamber is done by 1 person, at times with 1 - 2 helpers.

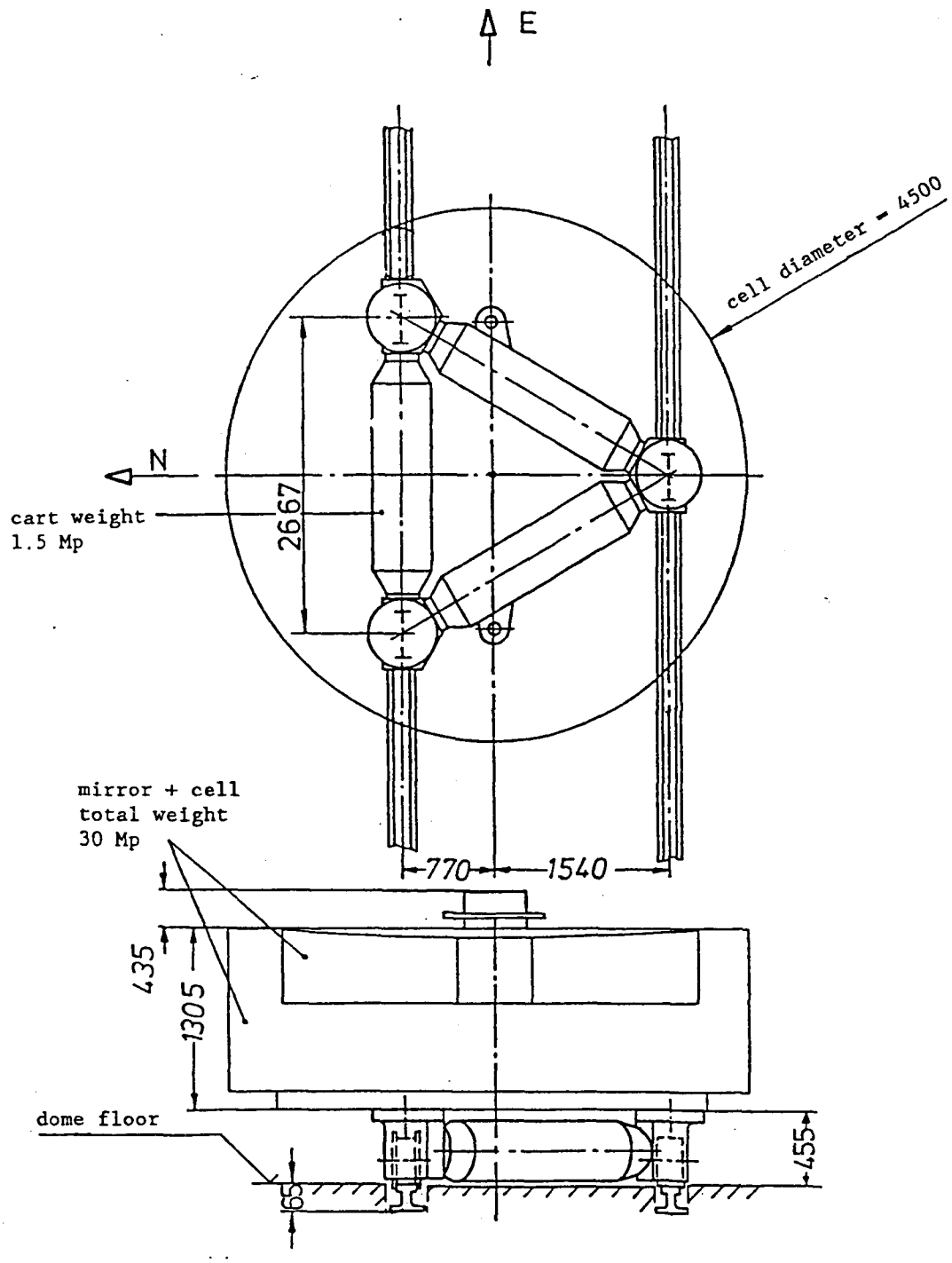

Fig. 7. In case of the 3.5 m mirror we use two identical carts, one on the dome floor which bears mirror and cell, the other on the ground floor for transportation of the mirror only.

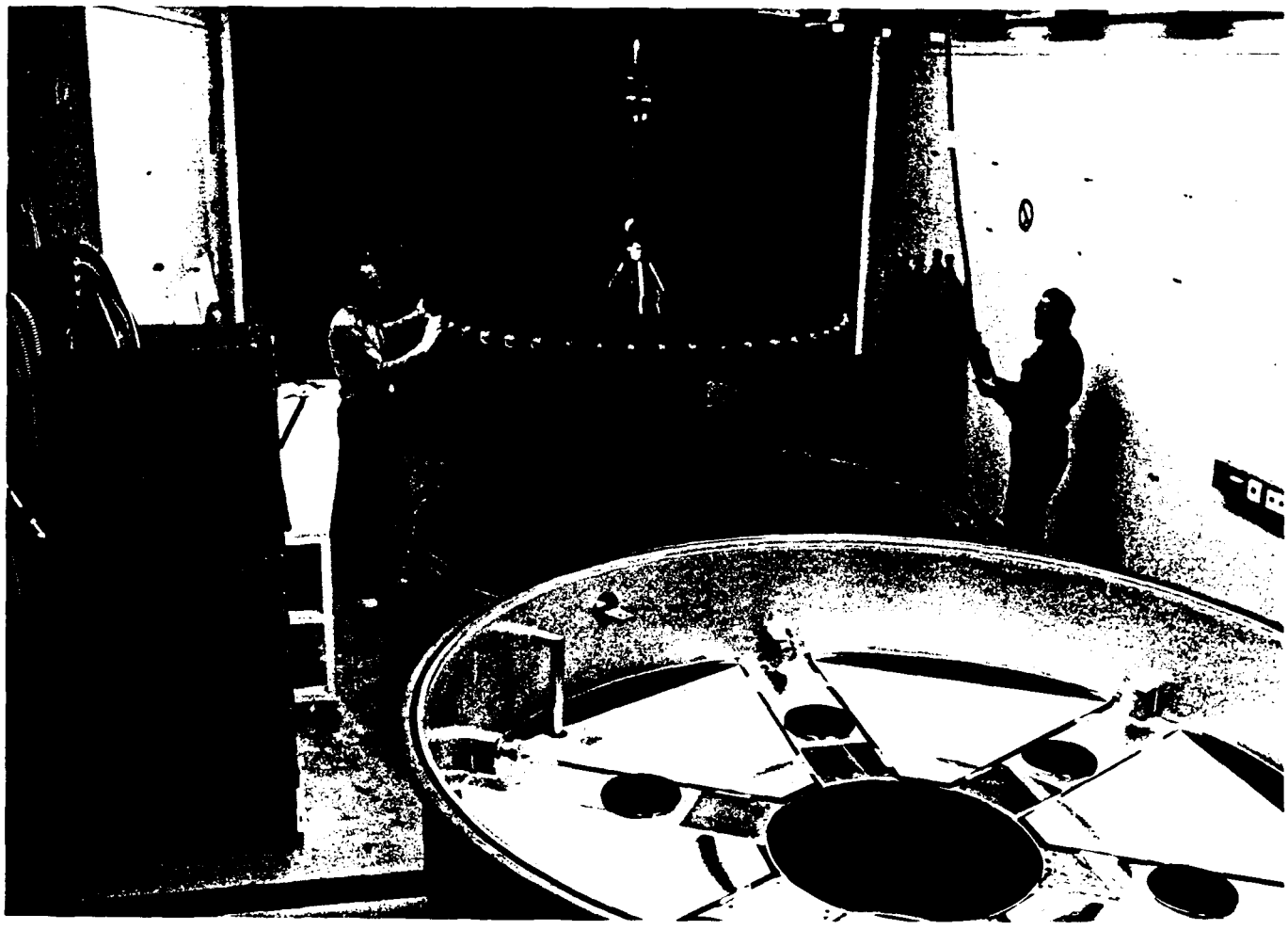

Fig. 8. A view in the aluminization hall of the 2.2 m telescope building. In the middle the glass fibre reinforced PVC tub for mirror washing. In the foreground the lower part of the vacuum vessel.

Mirror Cleaning

First step washing is done with tap water at slightly increased temperature (35° C) with detergent added.
In case that some grease or oil (from lubrication of dome shutter elements) is visible on the mirror, these stains are removed first with acetone before washing starts in order not to distribute further the grease on the surface.
The old aluminium film is removed using NaOH (8% solution) within about 15 minutes. If the removal of Al is not uniform or rather slow at some parts of the surface, NaOH solution at increased temperature (up to 40° C) is applied,

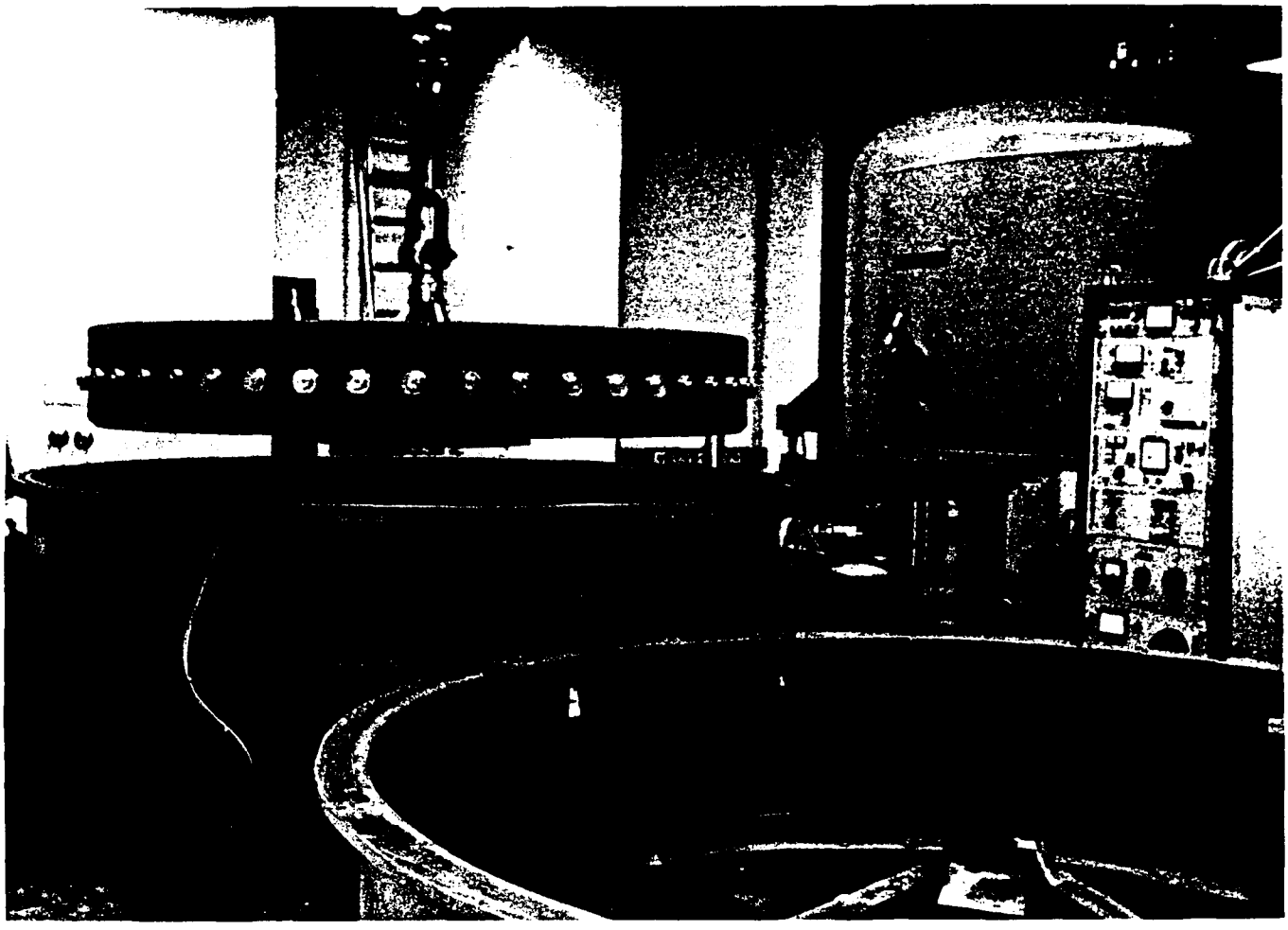

Fig. 9. The 2.2 m primary (Zerodur) is lifted from the washing tub into the lower part of the vacuum chamber. The upper part of the chamber and the control electronics for evacuation, glow discharge, and firing are to the right.

and cotton wool soaked with NaOH solution is placed on the mirror surface for about 10 minutes. In most cases, however, these additional steps are not necessary.

We do not use HCl. Even with special ventilation installations HCl gas cannot removed with sufficient efficiency. Use of breathing masks is not ideal. The main concern, however, is contamination and corrosion of electronics and other sensitive devices present in the plant. No problems of bad adhesion of the Al coating could ever be observed by not applying any acid medium.

After complete removal of the old Al film the surface is cleaned further with tap water and detergent. Normally, no mechanical treatment is applied. If it is

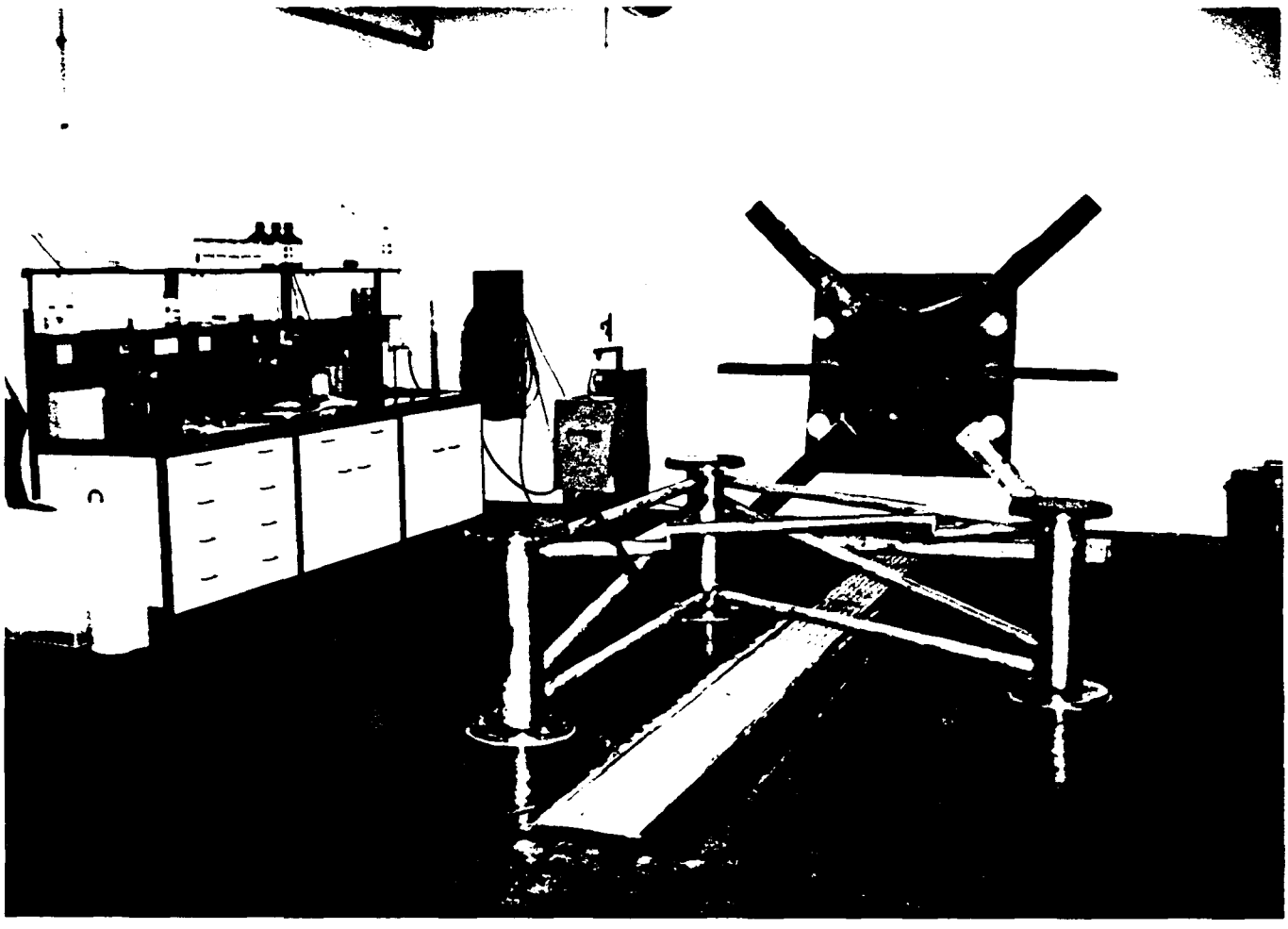

Fig. 10. Part of 3.5 m aluminization plant showing cleaning facilities. The ion exchanger producing de-ionized water which we use instead of distilled water is to be seen in the background (box-type device with hose on the wall).

inevitable, wet cotton wool is used wiping in radial direction towards the central hole in a single use mode, that is, for each radial strip on the polished surface new cotton wool is used.

When the surface seems to be clean, further flushing with distilled or de-ionized water in case of the 3.5 m plant is carried out (no disadvantages to distilled water used at the 2.2 m plant can be noticed).

Finally the surface is treated with pure alcohol (ethanol p.a. or isopropanol p. a.). In this final stage of cleaning with distilled water and alcohol a vacuum cleaner is used at the inner rim of the mirror to remove any remaining partic-

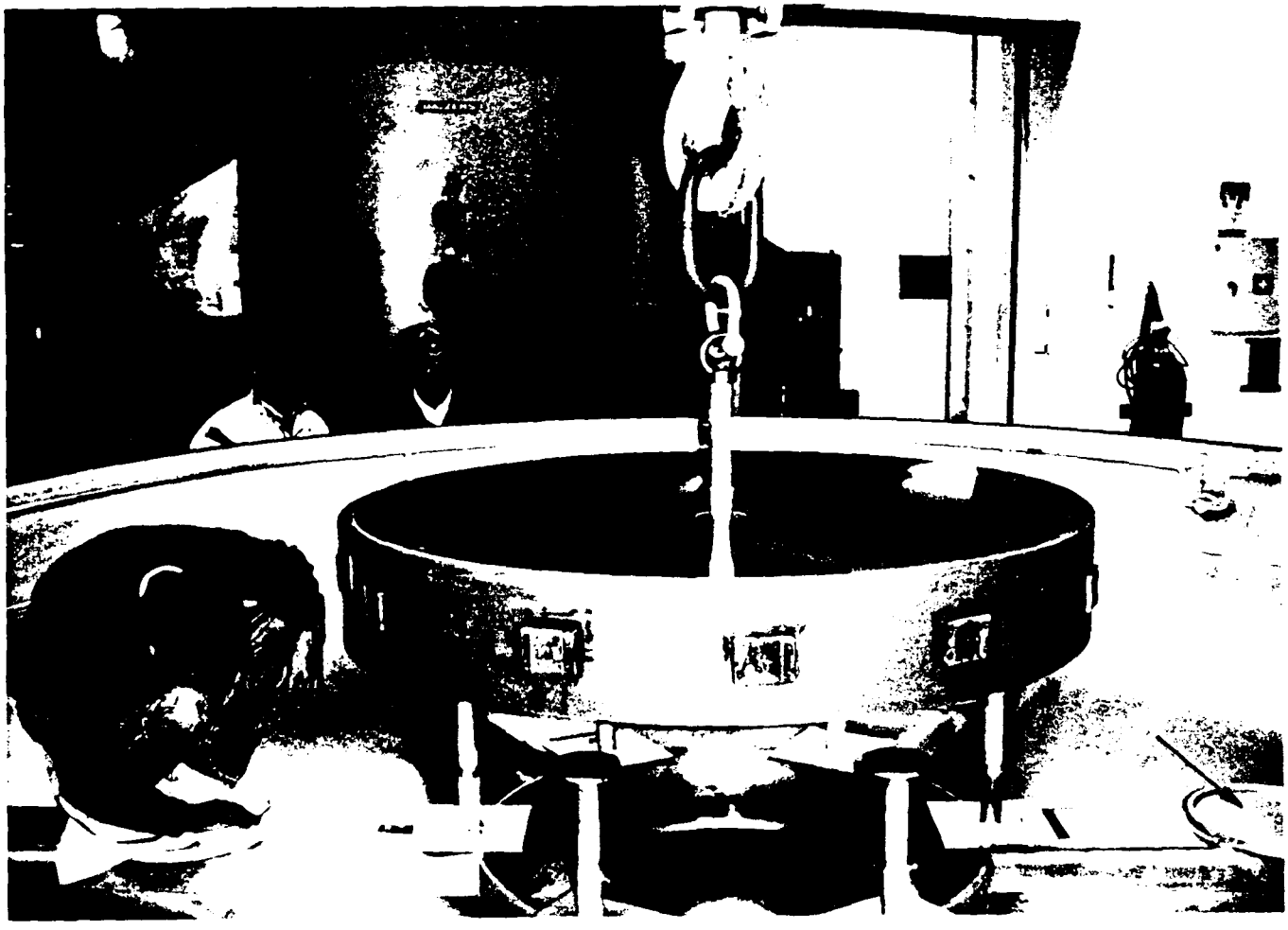

Fig. 11. A 1.5 m primary (Chinese 1.5 m telescope with 2 Nasmyth foci for the observatory of the Instituto de Astrofisica de Andalucia, Sierra Nevada, Spain) is brought into the 4 m vacuum chamber ready for aluminizing. It is placed on 6 supports of such a height to compensate for the difference in thickness of the 3.5 m primary of the MPIA (one of the 6 supports for the 3.5 m mirror is to be seen at right [arrow]; the vacuum sufficient rubber disks used to avoid direct contact between mirror and the metallic support are removed). For thin mirrors or tests with thin glass probes other supports of aluminium or stainless steel are used, see e.g. the support leant against the wall in the background in Fig. 10.

les or dirt floating in the liquid at the flattest part of the mirror surface. Moreover, this speeds up the drying process.

Before putting the mirror into the vacuum chamber, the remaining not polished surfaces including the rear side are cleaned with alcohol.

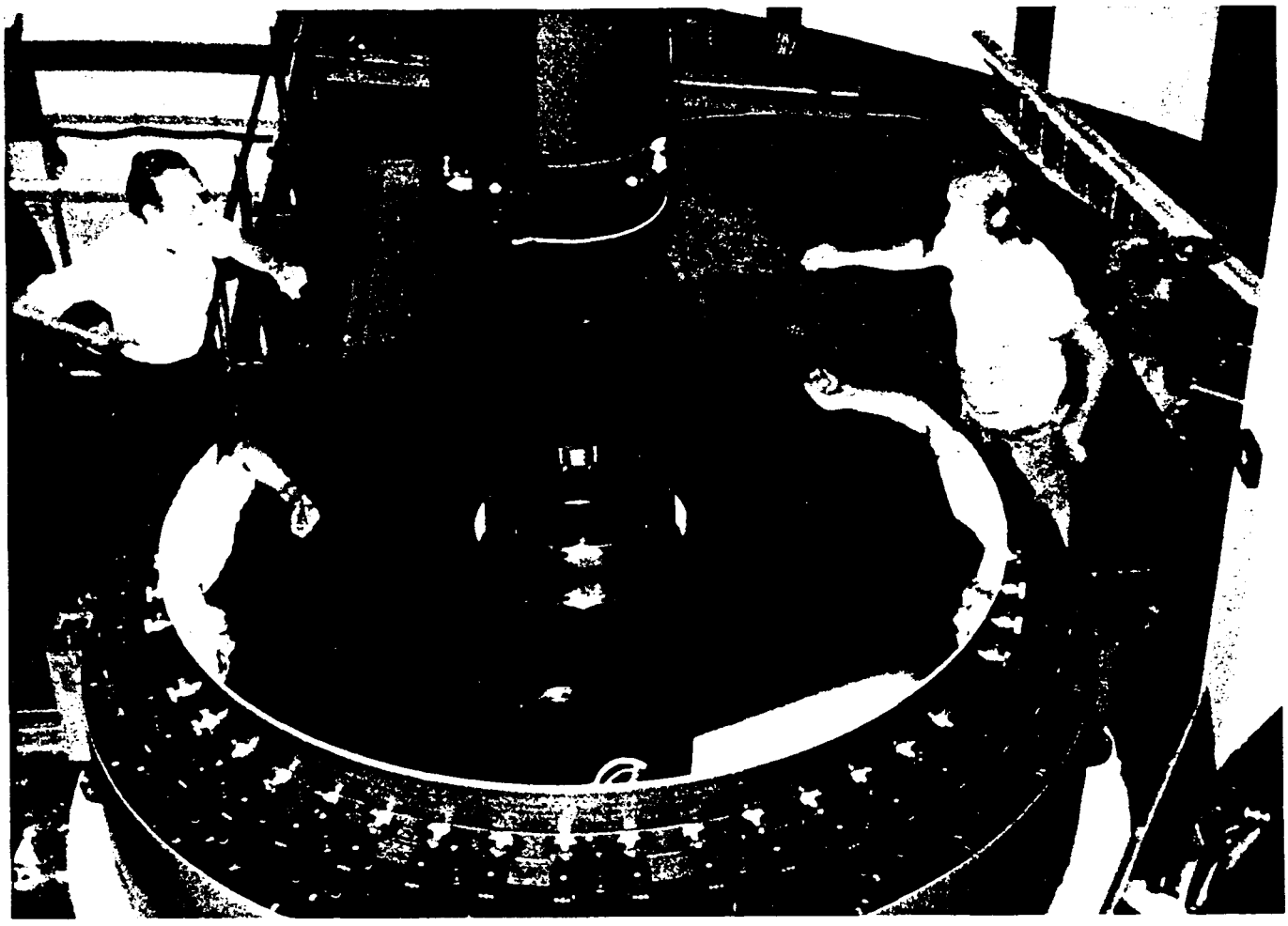

Fig. 12. Connecting the mirror baffle with the central radial definition support of the newly coated 2.2 m primary in its cell. This baffle serves also as base for the mounting of the first coudė flat mirror. Here, instead the compensation weight for this flat is mounted.

What are criteria for a clean optical surface, that is, clean at least for aluminization purposes? When the polished surface is drying, one can observe Newtonian interference fringes formed by a thin wedge of remaining distilled water and alcohol (Fig. 13), with the fringes slowly moving towards the mirror centre (a few mm/sec) as evaporation of the liquid is going on, leaving behind a dry surface which seems to be perfectly clean (right parts of Fig. 13). However, as long as one can see nonuniformities in the illuminated layer of cleaning liquid (left parts of Fig. 13) the polished surface cannot be considered clean.

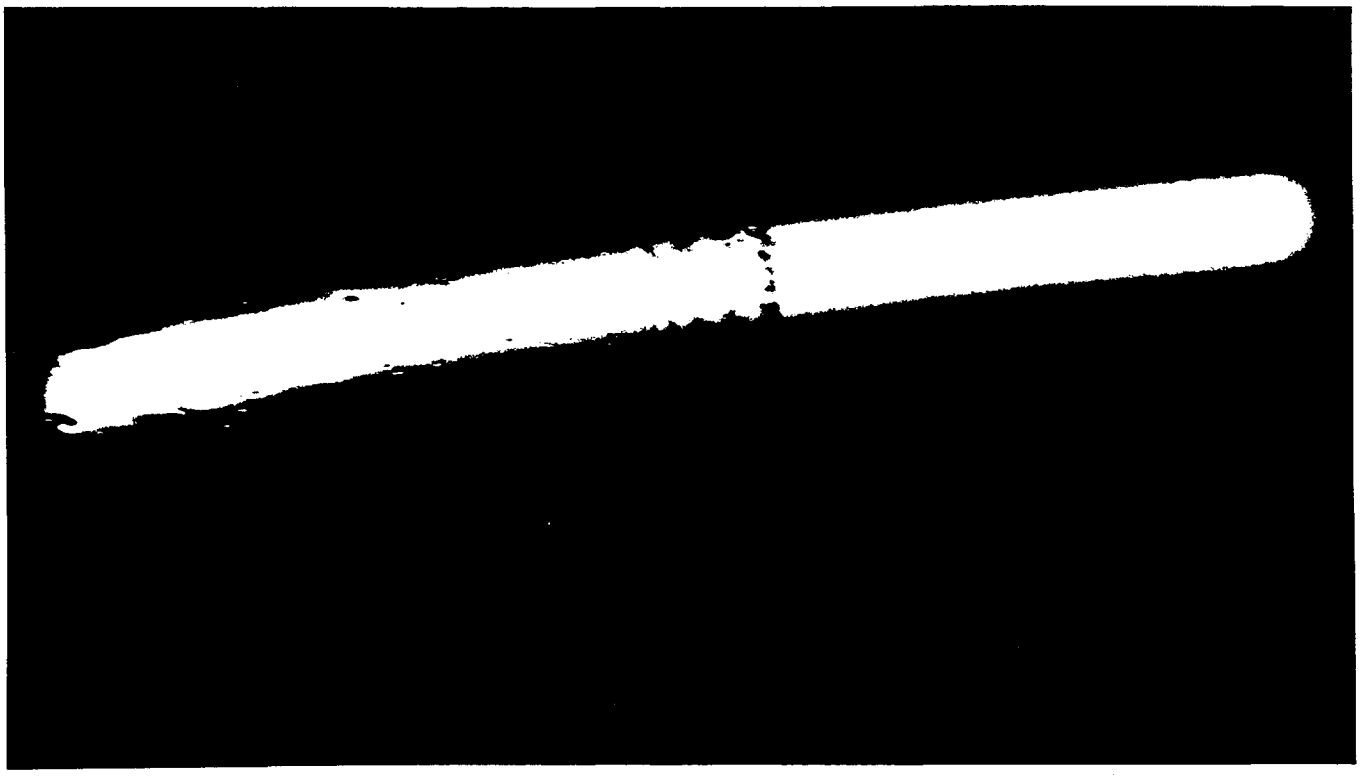

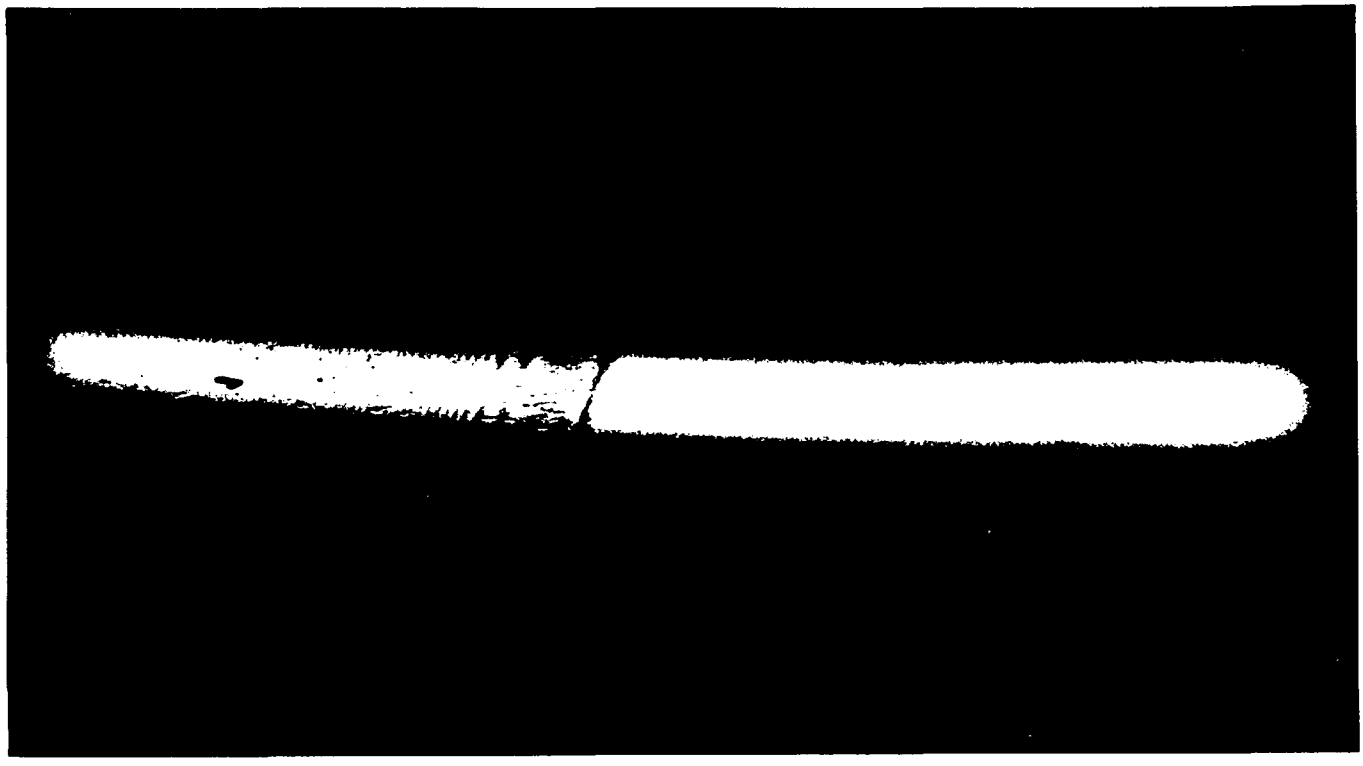

Fig. 13. Final stage of cleaning of the optical surface (Chinese 1.5 m primary of the IAA, Sierra Nevada) with Newtonian interference fringes formed by a thin wedge of cleaning liquid (see text). The best visible fringes have a distance of about 5 mm from each other.

Most of these nonuniformities seen in Fig. 13 are not impurities (particles) in the liquid layer but small craters formed by breaking up the thin liquid film due to some kind of (chemical ?) inhomogeneities in the polished surface affecting the surface tension of the liquid film in a different way than further away from the craters.
This (non-)visibility of the nonuniformities is a qualitative criterion only but a rather rigorous one, which means that cleaning and flushing has to be repeated until these craters are reduced to a minimum in size and quantity.

Mirror Coating

The vacuum chambers at the 3.5 m and 2.2 m domes are equipped with 96 and 64 tungsten filaments, respectively, arranged in one circle along the chamber wall with radius of 1.8 m (1.15 m) and height = radius above the mirror surface (Figs. 14, 15). There are four electrical circuits, each of them connected with every fourth filament. All 96 (64) filaments can be fired simultaneously (normal mode of aluminization), or separately one after the other of the four circuits with 24 (16) filaments each.
Each of the filaments is normally loaded with a 2 mm Al wire (99.999% purity) 58 mm long (0.5 g). A load of up to three times this normal load can be used. Above this maximum load aluminium droplets are found.
The tungsten filaments are fixed outside the mirror radius. Two rings of horizontal shields with a gap between them are mounted below the filaments to protect the mirror from aluminium droplets.
The glow discharge ring electrode and its surroundings as well as the regions around the tungsten filaments, baffles and shields are cleaned before each evaporation.
Using pure aluminium, the filaments have to be renewed after two to four times of firing. The aluminium foil cover of the glow discharge electrode is renewed after about 10 discharge processes.
After closing the tank pumping, glow discharge, aluminization, and flooding in total takes about 4 hours.
The glow discharge process starts if the pressure is 10^{-3} mbar. The glowing time is 15 minutes at 3 kV, 1.5 A; The pressure is 0.1 mbar controlled by a needle valve.
We begin with the evaporation at a gas pressure of $0.5 - 2 * 10^{-6}$ mbar supported by the additional pumping of a LN_2 cooled Meissner trap.
Firing takes 30 - 40 sec with 6000 A at maximum for the 3.5 m plant, falling down to 3500 A if all aluminium is evaporated.
Before flushing the tank it is important to heat the Meissner trap to ambient temperature. The heating is simply done by blowing out the nitrogen in it with compressed air.
Quality control of the adhesion of the new aluminium film is carried out by pressing a piece of scotch tape onto the aluminium surface and removing it suddenly.

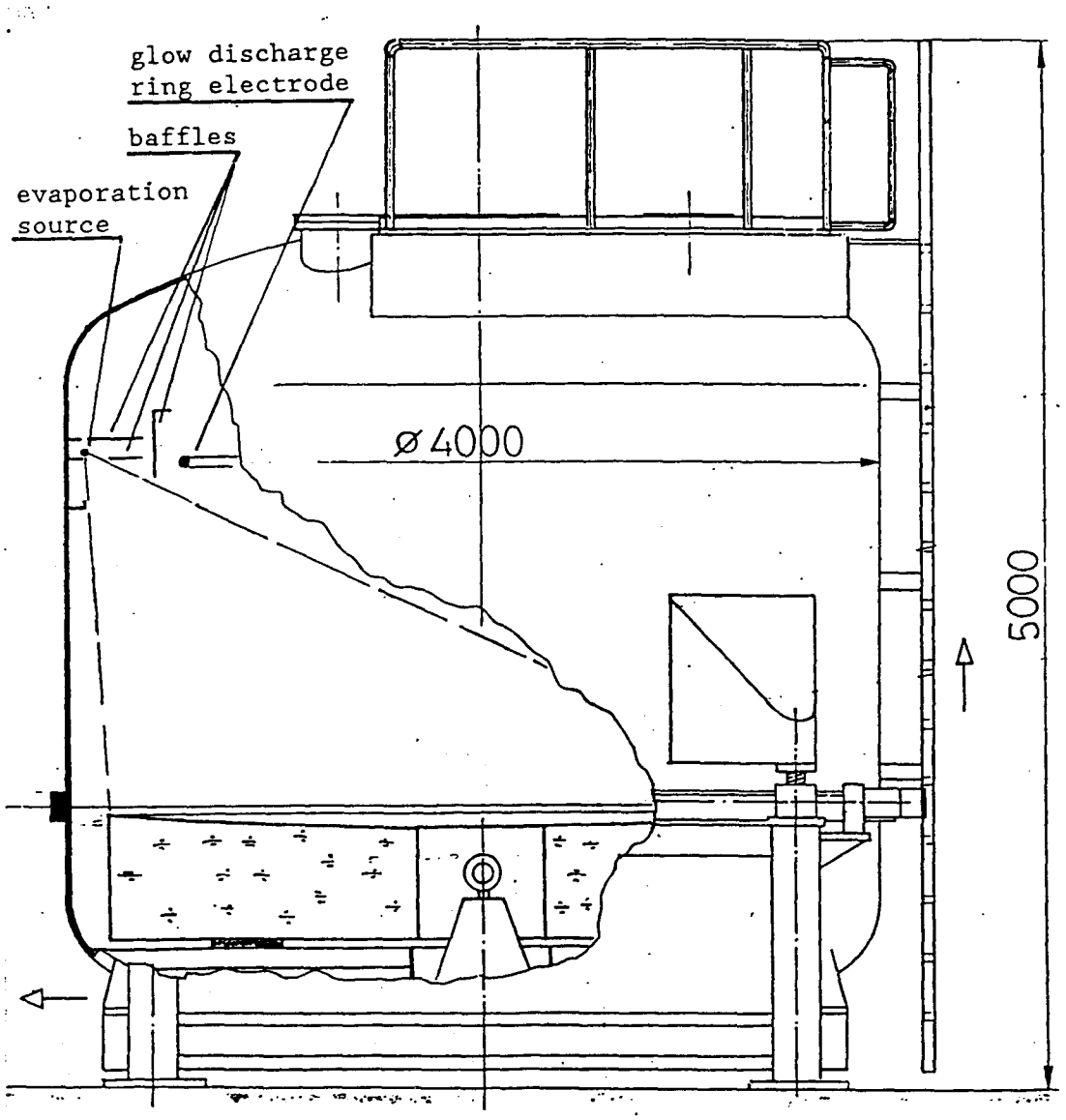

Fig. 14. Drawing of the 4 m aluminization chamber with indicated mirror position in the lower horizontally movable part.

Cleaning Mirrors in situ the Telescopes

The 3.5 m mirror cell is constructed in such a way allowing mirror washing inside the cell. However, experience has shown that the results of washing in most cases are not very satisfactory. Therefore, the primaries and also auxiliary mirrors with their reflecting surfaces looking upwards are periodically recoated about once a year (± about 4 months) without washing in the meantime.

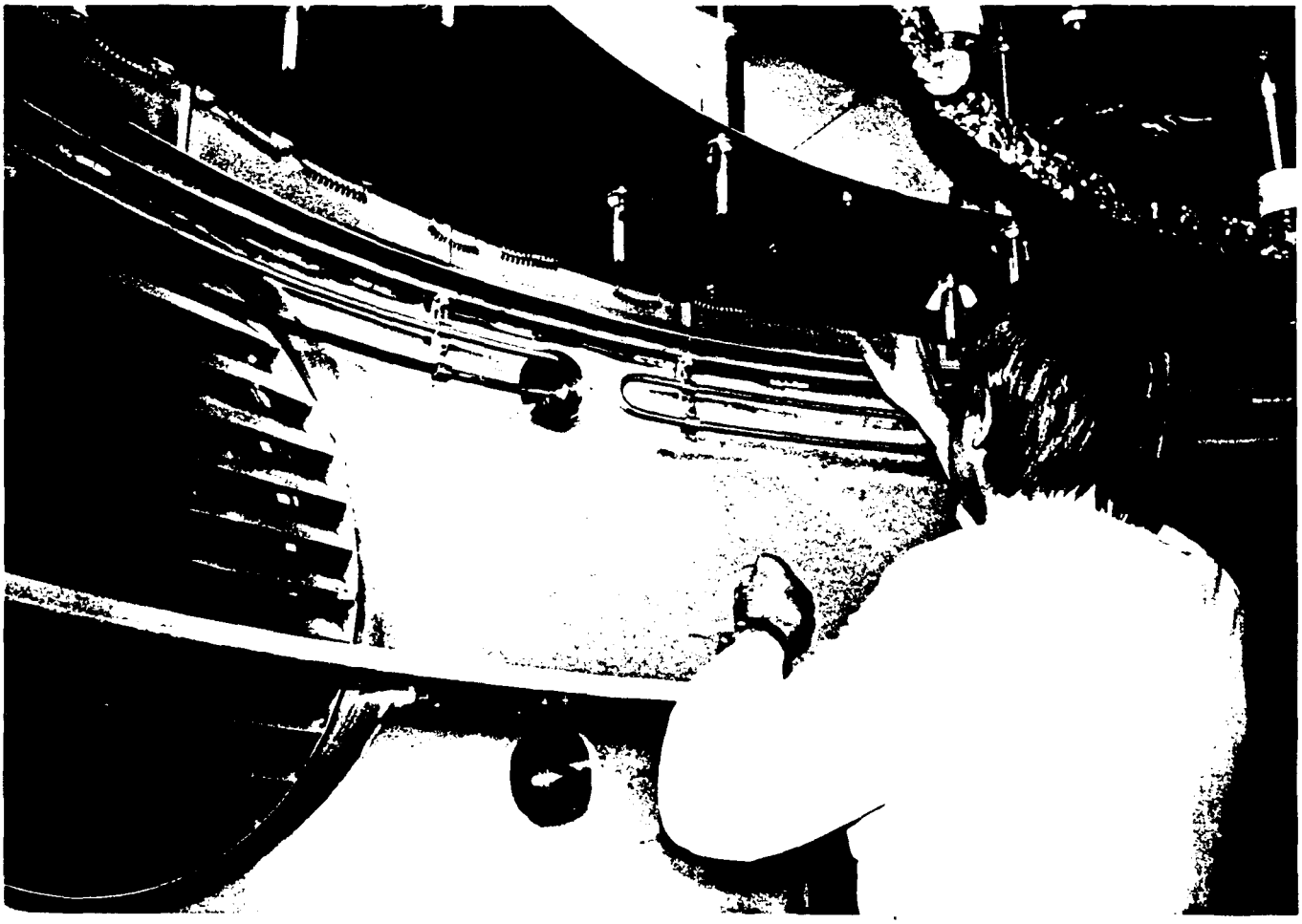

Fig. 15. Inside view of the 2.6 m aluminization chamber. The tungsten filaments are just loaded with aluminium wires. Annular shielding screens below the filaments and the Meissner trap are clearly visible. Part of the glow discharge ring electrode covered with aluminium foil is visible above the head of the operator.

Kitt Peak

Presentation by
A. Abraham

Canada France Hawaii Telescope

Presentation by
J. Sovka

Canada-France-Hawaii Telescope

"CFHT 3.6 meter PRIMARY MIRROR ALUMINIZING PROCEDURES"

by
Jerry Sovka
David Cowley
Tom Gregory

Overview for
ESO Workshop on Cleaning & Coating Large Mirrors
Oct 7-8, 1991

OUTLINE

1. Preamble

2. Introduction to Observatory
   - Mauna Kea, Hawaii

3. Summary of Procedures
   - Planning / Scheduling ;
   - Mirror Handling
   - Cleaning, Washing, Stripping
   - Aluminizing Chamber
   - Reassembly + Alignment + Etc.

4. Special Topics

5. Recommendations for 8-meter Projects

1. PREAMBLE

If we had our BEST Choice:

Aluminize ONCE, at beginning of Telescope life.
Install P.M., Align & Leave FOREVER (say, 30 yr.

Because:

(a) Telescopes are Expensive;
(as are Astronomers & Engineers, etc)

so, we need to:

MAXIMIZE UPTIME
MINIMIZE DOWNTIME
} = MAXIMUM SCIENCE PER KILO-MONEY
(k$, kDM, k¥, kF, kC$)

(b) Aluminizing Process Contains RISKS

- Primary Mirror: Heavy (14 Mg); Awkward; Fragile; Precious; Irreplaceable (Perhaps)
- Infrequent useage of equipt., staff;
- Limited Time Available ≡ STRESS

IF RECOATING IS SO RISKY, WHY DO IT?

BECAUSE WE MUST : i.e. NO CHOICE !

1. ALUMINIZED SURFACE "NATURALLY" DETERIORATES
   - oxidized / tarnished by air; volcanoes
   - becomes "dirty" due to water, dust, oil, ice, etc.
   - chemical damage (e.g. mercury spill
   - other physical damage (e.g. wiping ---

2. REPAIR & ADJUST P.M. SUPPORT SYSTEMS (To maximize Image Quality)

3. - REPAIR TELESCOPE or DOME STRUCTURES (For Safety or Access)

GFHT RECIPE
for
SUCCESSFUL RECOATING PRIMARY MIRROR

1. Right Staff
2. Good Equipment
3. Proper Procedures
4. Enough Time

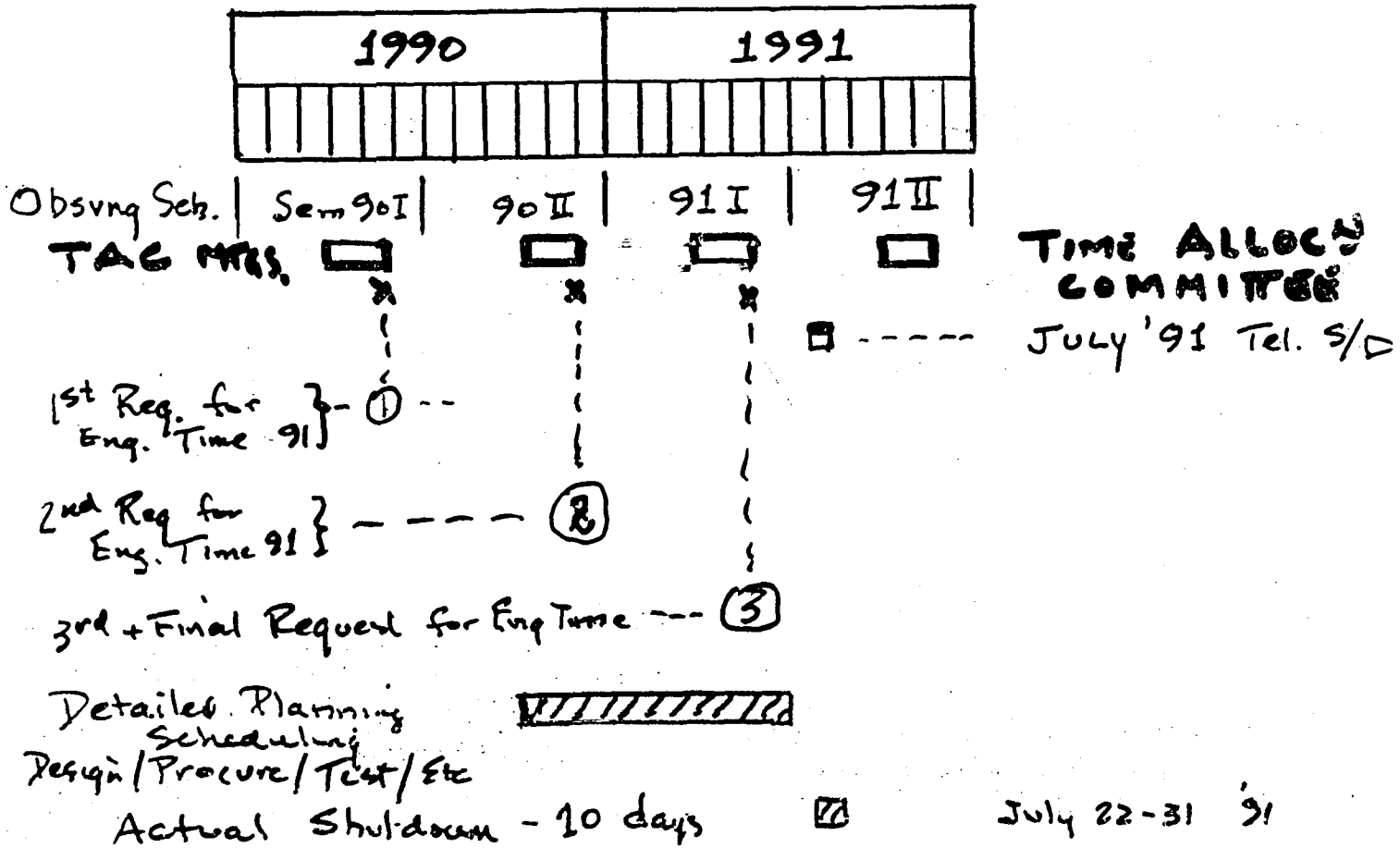

Two Year Planning/Scheduling Cycle for CFHT P.M. Aluminizing

CFHT Primary Mirror Aluminizing

Minimum Schedule

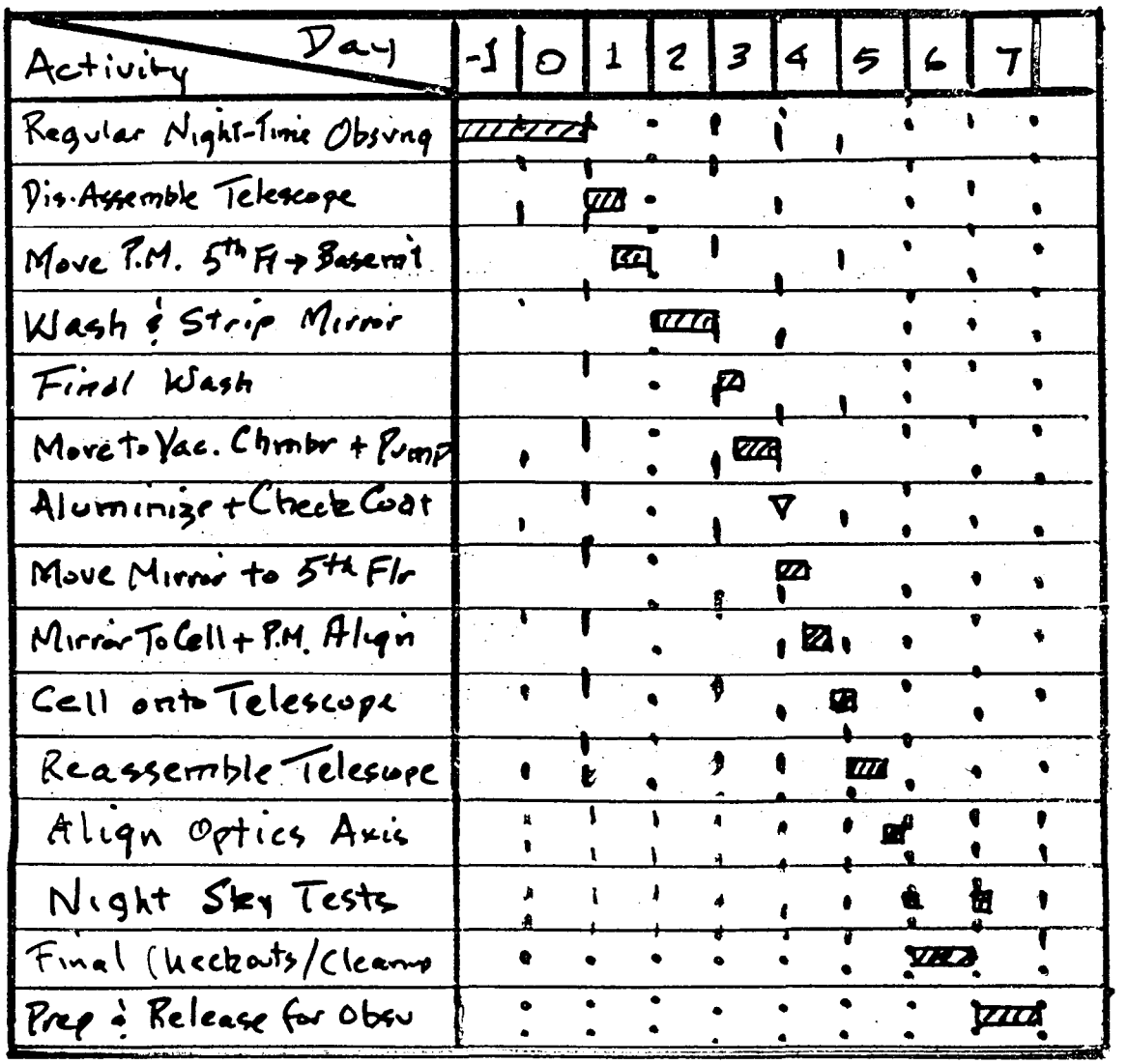

4.0 SPECIAL TOPICS

4.1 IN-SITU CLEANING

- water
- Spray-on plastic film
- CO_2 Snow

4.2 RISKS OF MERCURY LEAKS

(from Sec'y Mirror Support System)

- Hg-in-Air Contamination → Exposure
- liquid Hg throughout Telescope
- Damages Aluminized Surfaces
- Unexpected Shutdowns + Realuminizing ALL Optics

4.0 SPECIAL TOPICS

4.1 IN-SITU PRIMARY MIRROR CLEANING

- We've tried a variety of techniques with a variety of surfaces.

(a) Water washing – works if temperature of glass & telescope are above 0°C.
- also, electronics & mechanics are vulnerable
- good for dust mainly, if not adherent.

(b) Spray-on plastic film then strip.
- good for dust; some oils
- leaves hazy residue
- not used now

(c) CO_2 Snow – best for now

4.2 RISKS OF MERCURY

From Secondary Mirror Support System

Small puncture (~5 mm long) in rubber tube ~ 125 ml (4 oz) Not noticed for a number of days; small droplets of liquid mercury fell ~ 20 meters, onto primary mirror covers; primary mirror, on tube; Serrurier truss; inside bundles of cables.

Those droplets when they hit disintegrated, almost atomized, especially on Aluminized surface primary mirror, highly chemically active; together with water damaged 70% of surface like a heavy frost

Recovery required special clothing; Hg-in-air detectors to minimize personnel exposure; vacuum sniffers Hg absorbing powders;

11 months shutdown; Re-aluminizing P.M., Sec.M., other optics

5. RECOMMENDATIONS

As most of you know, CFHT has as a main objective, high resolution astronomy, depending upon good "seeing." To achieve this image quality we are lucky to have an excellent site; with the telescope above most ground effects. In addition, we concentrate much effort on dome thermal environment, mirror seeing; + tuning of our optics (mirror support systems, collimation, etc.) Our telescope design is now 20 years old, so we need to work hard at it. Nonetheless, we are routine now measuring images Averaging 0.6 arcsecs, over one-month, occasionally 0.″35.

We are still limited by optical aberrations (1/2 in the PM original figure, 1/2 in optical train dome & mirror seeing. To reduce these further we have embarked upon a 3-year
1.7 M$ program of improvements to mirror support systems; secondary mirror supports; and adaptive optics corrections. Our goal is to reach ~0.″4 arcsecs FWHM average without adaptive optics and diffraction limited (0.″1) @ 1μm wavelengths with AO.

We have seen Image Quality Budgets for
8-m Telescope designs with limits of averages 0.2 arcseconds, using Active Mirror Systems

Having been at this "game" for over 10 years, CFHT assure's you that this will not come easily.

Everything affects everything else and they all tend to ~~reduce~~ degrade "seeing".

Mother Nature is a reluctant mistress.

It is ESSENTIAL to concentrate on achieving ultimate control over Primary Mirror Variables:

- Precise figure;
- Proper, accurate, predictable active support systems
- Accurate, precise mirror temperature control.

All of these, in turn, must be designed, built and operated to accomodate your P.M. Cleaning & Recoating Process.

5.0 RECOMMENDATIONS

For 8-m high image quality of 0.″2 FWHM

1. Use your most brilliant, experienced DESIGNER. (Thorough, broad, deep, flexible ....) Feedback through REGULAR, FREQUENT DESIGN REVI.

2. Design to PROTECT P.M. from SURFACE CONTAMINATION TO MINIMIZE RECOATINGS.

3. Clean & Recoat IN-SITU, if possible

4. Minimize TELESCOPE DISASSEMBLY

5. AVOID MERCURY Support Systems.

6. Do it RIGHT, The FIRST TIME!

3.6 METER PRIMARY MIRROR

ALUMINIZATION

3.6 METER PRIMARY MIRROR ALUMINIZATION

(Procedures followed since May, 1986)

A. Initial Inspection

The primary mirror is removed from the telescope and delivered to the aluminizing room and placed atop the mirror washing stand. Next day the mirror sides are cleaned and the radial support pads wrapped in polythene plastic for protection. The mirror surface is rinsed with tap water to remove loose dirt and then it is washed with a detergent solution of 100 parts water to 1 part Liqui-Nox concentrate. Sponges are used in a dabbing, up-down motion only so as not to scratch the aluminum surface. Oily spots are carefully dobbed-up with xylene soaked Kaydry towels. Also, bubble holes in the surface are cleaned.

The surface of the cleaned aluminum is inspected for pinholes, abrasion and scattering due to environmental corrosion. The surface is examined by viewing a high intensity lamp in reflection from the surface. There was a significant amount, perhaps a few percent, of scattering of the specular reflection into a halo of diffuse light. At this point a decision must be made to keep the old coating or remove it and deposit a new one.

B. Removal of Old Coating

The coating is stripped from the glass surface by flooding it with a solution of hydrochloric acid and cupric sulfate[1]. After rinsing the mirror with tap water and drying it with Kaydry towels a solution of sodium hydroxide is used. This has little effect on the more stubborn residual aluminized areas. Finally the mirror surface is flooded with de-ionized water and then sprinkled with reagent calcium carbonate powder and rubbed with cotton pads. The calcium carbonate is sufficient to remove the last residue of aluminum from the optical surface. The mirror is rinsed with de-ionized water and then rubbed dry with Kaydry towels. Care must be taken not to allow the mirror to dry on its own by evaporation as water spots would be a likely result. After the entire mirror surface is gradually dried there still remains a large amount of Kaydry towel lint sticking to the glass surface as a result of the static electricity produced by the rubbing of the clean glass with the paper towels. This lint is removed with static-master anti-static brushes before placing the mirror in the vacuum chamber.

---

[1]See procedure for stripping aluminum coating.

C. Aluminization

Once the mirror placed within the vacuum chamber, the roughing pump and roots rotary lobe blower evacuated the chamber to a pressure of 5 microns in about 1 hr. After the cold trap LN_2 chevrons are filled, the diffusion pumps is used to lower the pressure to below 5×10^{-5} torr. A glow discharge is performed to insure cleanliness of the mirror surface[2]. After the glow discharge, the high vacuum diffusion pumps are used to bring vacuum to the 10^{-6} range. The meissner coil is filled to aid in the further reduction of pressure. Ultimately a pressure of 3×10^{-6} torr is reached in about 3 hours from the time of initial pump-down.

The individual tungsten filaments, each laden with aluminum clips are pre-heated together in a series/parallel circuit for 4 minutes to bring them all to approximately 1000°C. When the Inficon crystal thickness monitor indicates 50Å of deposited aluminum, the power to the filaments is increased to the maximum level. Within 30 seconds the Inficon monitor is reading 637Å. This thickness, according to previous tests, corresponds to an actual coating thickness of 900-950Å on the mirror surface. A deposition rate of 27Å per second is indicated upon the Inficon monitor. Interferometric tests were performed upon test plates placed at the central hole and outside the circumference of the mirror. These tests, and others performed earlier at zones simulating the mirror surface showed the coating to be radialy symmetric and even in deposited thickness to within 150Å. The probable wavefront error induced by the coating process is estimated to be less than or equal to $\lambda/15$ at visible wavelengths. During the filament firing, no drops of molten aluminum fall upon the mirror surface. The resultant coating looked brilliant and very free of scatter over its entire area and showed no signs of bloom or diffusion pump backstreaming. No wipe marks or haze due to incomplete cleaning should be observed upon the mirror surface.

D. Adhesion Test

A scotch tape test is performed on the outer bevel and upon the actual mirror surface one inch inside the outer circumference. No aluminum should be removed by the tape at either site.

---

[2]See glow discharge procedure.

THICKNESS OF EVAPORATED ALUMINUM FILM

During the month of April 1986 tests of the CFHT Summit Aluminizing chamber were carried out to measure the actual thickness and uniformity of Aluminum coatings produced by the 112 filament array of evaporation sources. A set of ten test plates were used to simulate the mirror surface. For the initial test all filaments were loaded with 10 loops with a weight of .065 grams each. (Loops are from Jori Resources and are of 99.99% purity).

The loaded filaments were heated for approximately 5 minutes while monitoring the amperage at Inner Ring #2 = 330 amps. The Inficon crystal thickness/Rate of deposition monitor at the end of the 5 minute preheat period was reading 0-1Å /second. The total accumulated thickness after the preheat was 40Å.

At this time the array voltage was increased and monitored at the Inner Ring #2 = 25 volts. This voltage was maintained for approximately 80 seconds during which time the evaporation rate reached a peak value of 28 Å/sec. After an elapsed time of 80 seconds the evaporation rate dropped to zero and all power to the array of filaments was stopped. A total indicated thickness of 652 Å was obtained. When the test plates were measured with the Angstrom-scope interferometer, the following thicknesses were obtained.

1. Test plates approximating the outer 1 meter annular surface = 884 to 913Å .

2. Test plates approximating the inner 1 meter circular surface = 1148 k to 1207Å .

It was concluded from these results that a superior coating uniformity could be obtained by loading outer ring filaments with 10 loops and inner ring filaments with only 8 loops each. Also, the Inficon crystal monitor readings are about 30% low presumably due to the proximity of the crystal sensor to the chamber wall (~150mm).

During the primary mirror aluminization in May 1986, test plates were positioned around the circumference of the mirror and within the central hole. After evaporation the following thicknesses were obtained upon the test plates as measured with the interferometer:

a. Circumferential Test Plates = 842, 795, 795, 845, 825, 913, 913, 854, 756Å .

b. Central Test Plate = 962 Å+.

c. Inficon Measurement = 639Å .

d. Maximum Deposition Rate = 27Å /second.

It is estimated that local mirror surface wavefront distortions caused by the coating process itself are less than $\lambda/15$ at visible wavelengths. Another test is planned for the future as it is felt that the 3.6 meter mirror surface coating is not accurately depicted with only 10 test plates and that perhaps 30 plates are necessary. This is particularly important near the chamber walls.

CFHT Vacuum Chamber

T. Gregory

22 April 1986

⊕ Test Plate Height = 24 inches (.6096m)

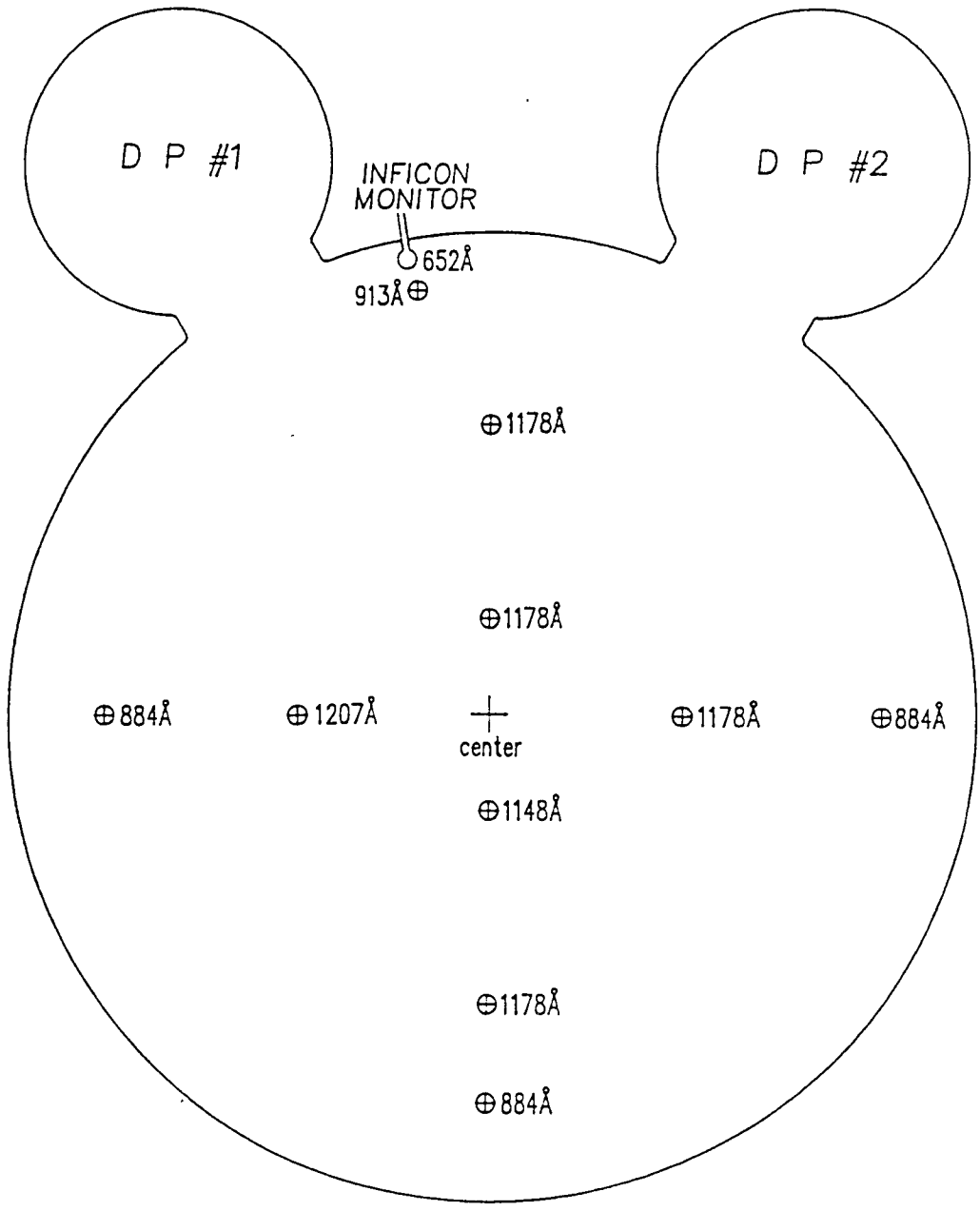

Filament Loading: All loaded with 10 loops of .065 grams Al.

SUMMIT VACUUM CHAMBER PREPARATORY CHECKLIST

1. Inficon monitor operation.
2. Cold cathode gauge operation.
3. Chamber lift-jack operation.
4. Integrity of roughing manifold rubber connection.
5. Pre-aluminized test plates, 10 required.
6. 10 single edge razor blades required.
7. Test plate stands.
8. Static-master brushes, 6 required.
9. Check air pressure and control panel functions.
10. Glycol coolant, chiller fan and pump operation.
11. Back-up diesel generator checklist.
12. 3x160 liter dewars of LN_2 required.
13. Viewpoint windows cleaned.
14. Torque wrench (15 in-lbs.) for filament installation.

CFHT SUMMIT VACUUM CHAMBER CHECKLIST

Pump-down Operation:

1. Check Inficon Thickness Monitor for proper crystal oscillation.
2. Close tank after inspecting bottom plate "O" rings for smooth and very light lubrication with Dow Corning High Vacuum Grease.
3. Close Air-leak and vent valves.
4. Turn cycle selector switch to manual position (key switch).
5. Connect chamber foreline manifold to roughing pump.
6. Turn chiller condenser fan "ON" in equipment room with chillers.
7. Turn on 2 glycol supply taps and adjust flow with glycol return tap to flow gauge valve of 2 1/4 gpm. (The safety flow switch enables the D.P. heating circuit at flow rates in excess of 2 gpm).
8. Start stokes roughing pump. (10 minute warmup period)
9. Check rough pump flow and oil level sight glasses.
10. The Rootes Blower will start automatically after a few seconds when $p \leq 15$mm Hg. (see gauge near holding pump)
11. Turn on air supply valve and air dryer. (plug in!)
12. Start the holding pump.
13. Open foreline valves #1 and #2 to evacuate the diffusion pumps. Wait for valve to open, takes 30 seconds.
14. Turn on thermocouple gauges number 1 through 4.
15. The roughing pump will quickly evacuate the DP's to $p \leq 10$ microns at T.C. #2 and T.C. #4.
16. Open holding pump valves to D.P.'s
17. Close foreline valves #1 and #2.
18. Turn on DP's #1 and #2. (These will heat up only if the glycol safety flow switch senses greater than 2 gpm glycol coolant flow).
19. Turn on seal pump.
20. Open chamber roughing valve. (It will take approximately 30 minutes for the rootes blower to turn on at p=15 mm Hg. It will take an additional 30 minutes for the chamber to reach the range of $p \leq 20$ microns).
21. Turn on Varian Cold Cathode gauge (pressure should be low enough to be on scale within 1 hr. after opening roughing valve. ($p \leq 10$ microns)
22. Connect LN_2 supply to DP Chevron traps via LN_2 manifold. (The liquid level in the traps is automatically maintained. The consumption of LN^2 is 10-20 liters/hr). Open trap valves.
23. Connect LN_2 supply to Meissner trap.
24. While the chamber is roughing down it will be necessary to monitor the fore-pressure of the hot DP's as their pressure may exceed 100 microns with only the small capacity holding

chamber rough pumping after the interruption. (There is a 10 second delay built into the control circuit which delays the opening of the foreline valves after closing the chamber roughing valve).

25. When the chamber pressure is approximately 10 microns close the roughing valve and open the foreline valves to the DP's.
26. Close the holding pump valves.
27. To start high vacuum pumping on the chamber through the diffusion pumps open the high vacuum valves #1 and #2 in succession while monitoring the foreline pressure in each to not exceed 100 microns. (As a precaution against backstreaming D.P. oil into the chamber allow about one minute between opening of the High Vacuum valve #2 after high vacuum valve #1 is opened).
28. Shortly after both high vacuum valves are opened the chamber pressure should be in the low 10^{-5} torr range. (SEE GLOW DISCHARGE PROCEDURE).
29. With the chamber empty it takes about 1 hr. after the high vacuum valves are opened to reach a chamber pressure of approximately $5x10^{-6}$ torr.
30. During the high vacuum mode of pumping the Meissner trap should be filled as follows. Turn on the LN_2 supply to the Meissner coil by gently opening the LN_2 supply valve less than one full turn to avoid pressure vibrations from LN_2 evaporation inside the coil. Pressure rises occur within chamber if the coil is filled too rapidly. Trap fills in approximately 30 minutes. Close valve and re-fill in 10 minutes.
31. The chamber is ready for operation at a pressure less than or equal to 5×10^{-6} torr.

Procedure for Stripping Mirrors of Aluminum Coating

1. Change water filters.

2. Prepare a Solution of Hydrochloric Acid as follows:
   4 liters of deionized water
   4 liters of Reagent grade (1 Normal) Hydrochloric Acid
   100 grams of Cupric Sulfate crystal, Reagent grade.
   (When diluting, always add acid to water!)

3. Prepare a solution of Sodium Hydroxide:
   4 liters of solution at a concentration of 100 grams of Sodium Hydroxide pellets (Reagent Grade) to 1 liter of deionized water.

4. Protect radial supports attached to sides of mirror by duct taping polyethylene film around them.

5. Flush mirror surface with copious amounts of filtered tap water to remove loose particles of dust.

6. Use Xylenes to clean any oil from the mirror surface with soft Balzer's cotton wool pads.

7. Wash mirror with diluted (1:50) Liqui-Nox detergent using natural sponges and a dabbing action without heavy rubbing. Repeat this washing after a thorough rinse.

8. After mirror is clean, dry it's surface with natural chamois skins and inspect coating for condition, i.e. pinholes, stains, etc...

9. During washing operations, pay careful attention to cleaning out bubble-holes in the optical surface as these can conceal dirt.

10. If it is decided not to save the old aluminum coating and re-coating is necessary then apply the Hydrochloric/Cupric Sulfate solution to the mirror surface. Spread the solution by dragging soft cotton wool along the surface to even the flow of solution over the aluminum coating. (Always wear protective apparatus when working with acids & bases.)

11. After 5 to 10 minutes most of the Aluminum coating will have been removed. Some rubbing action may be required.

12. Rinse with copious amounts of filtered tap water and then dry the surface with Kaydry Laboratory paper towels.

13. Inspect the surface for residual aluminum or water marks and other hazy wipe marks which have stubbornly refused to be dissolved by the Hydrochloric/Cupric Sulfate solution.

14. If the surface still does not appear to be perfectly clean of old deposits it is necessary to flood the surface with deionized water and to sprinkle a small quantity of Reagent grade Calcium Carbonate powder upon the surface of the water film. A light rubbing action should remove any residual stains or deposits. (Note: the $CaCO_3$ powder must never be applied dry or allowed to dry upon the mirror surface.

15. The mirror surface is once again flooded with copious amounts of filtered tap water. Finish the rinse with deionized water and dry with Kaydry towels. Repeat step #14 if needed.

16. Wash mirror surface thoroughly with diluted Liqui-Nox detergent using natural sponges.

17. Rinse well with plenty of filtered tap water and then deionized water.

18. Dry part of the mirror with Kaydry towels being careful not to allow the mirror surface to dry on its own as water marks will occur. Gradually, dry all the mirror keeping the portions not being dried at the moment wet with deionized water. Much rubbing is involved with this step and some residue of the paper toweling will remain on the mirror surface.

19. To remove the paper residue on the mirror it is necessary to brush the surface thoroughly with the set of six parallel anti-static brushes before placing the mirror inside the vacuum chamber.

20. As with all optical coatings, success depends upon obtaining an extremely clean substrate surface.

FILAMENT INSTALLATION

Filament type: R.D. Mathis* (Order as 4 x .030 W RDM-F-16683A)

1. Install 112 new tungsten filaments onto the chamber electrodes using 10-32 x 3/4" stainless steel Allen Socket flat head screws. (1/8" Allen Socket opening)

2. Tighten all 224 screws using special torque wrench to insure equal contact resistance at joint.

   Torque setting = 15 in-lbs.

*The R.D. Mathis Company
2840 Gundry Avenue
P. O. Box 6187
Long Beach, CA 90806
PH: (213) 426-7049

OUTGASSING OF FILAMENTS

To perform high temperature (>2000°C), vacuum cycle of filaments.

1. a) Pump chamber to $5x10^{-6}$ range (see: Pump Down Operation).
   b) Perform a glow discharge as described in SOP 51 p. 13.

2. Turn Filament power switches to all 4 filament rings to "on" position.

3. Turn cycle selector switch to "manual" position.

4. Slowly raise power to all rings until current for inner ring #2 is about 330 amperes.

5. View all filaments or reflected light from filaments to insure they appear to heat equally and become incandescent together and with same apparent temperature.

6. After approximately 3 or 4 minutes rapidly increase the power to all filaments until there is 25 volts of potential across inner ring #2. Hold this power level for 10 seconds to degas all filaments of impurities (low melting point metal, etc.).

7. Lower power to all filaments until all ammeters read zero.

8. Turn off all 4 filaments ring power switches.

9. Turn cycle selector switch to "off" position.

10. End of Filament outgassing (See: Shutting down system).

    (Note: Tungsten melts at 3,382°C)

Loading Aluminum Loops on Filaments

1. Aluminum Loops: Jori Resources*-.065 gram loops-99.99% Al.

2. Loops are loaded only at the downward curves of the filaments near the ends where the electrodes connect to the filament. The central "pigtail" helix of the filament is left free of loops to discourage the possibility of a droplet of molten aluminum falling through the hole in the baffle plate and damaging the mirror surface. If a drop of molten aluminum does fall it will most likely fall off near the ends of the filament and will harmlessly cool and solidify on the baffle plate. Only a relatively thin layer of molten aluminum should be drawn by capillary action toward the central helix of the tungsten filament.

3. To deposit an even thickness of aluminum on the mirror substrate it is necessary to load 10 loops onto each of the outer ring filaments (those two concentric sets of filaments nearest the outer wall of the vacuum chamber) and 8 loops onto all the remaining inner rings of filaments.

*Jori Resources Corp.
2128 Knoll Drive
Ventura, CA 93003
PH: (805) 642-2266

GLOW DISCHARGE OPERATION

Theory-

In order to condition the substrate surface to enhance the quality of the coated film, a glow discharge is caused to occur within the chamber which has been preevacuated to $5x10^{-5}$ torr with the substrate inside the chamber. The glow discharge is ignited by a continuous AC high voltage arc across two insulated ring electrodes of aluminum after the pressure within the chamber has been increased by the introduction of air to a pressure of 25 to 30 microns.

The glow discharge has several beneficial effects which are:

1. The substrate surface is degassed through heating.
2. Conversion of organic substances on the substrate into their volatile components through interaction with ionized residual gas.
3. Desorption of films on the substrate surface through electron impact.

Operation-

1. The chamber is evacuated to 5×10^{-5} torr.
2. Close high vacuum valves. Shut off chamber ion gauge.
3. Open D.P. holding pump valves.
4. Close D.P. foreline valves.
5. Open air-leak pressure control valve.
6. When pressure reaches p= 25-30 microns open chamber roughing valve.
7. Monitor chamber pressure at TC #1 while adjusting vernier throttling valve until pressure is maintained between 25-30 microns (nominal setting = 10.2).
8. Monitor pressure at TC #1 throughout glow discharge cycle of approx. 10 minutes.
9. Turn powerstat located on glow discharge panel fully counter-clockwise until at the zero setting.
10. Turn on glow discharge. First turn on pressure control.
11. Turn powerstat clockwise slowly until .5 ampere is read on the ammeter. Maintain this current setting throughout glow discharge cycle. (A powerstat setting of 40% should be sufficient to maintain the .5 ampere current at an electrode potential of 1,000 to 2,000 volts.
12. After 10 minutes return powerstat to zero position and turn off the power.
13. Close pressure control valve and vernier valve.
14. After chamber has roughed to a pressure of 10 microns close the roughing valve and open the D.P. foreline valves.
15. Close holding pump valves. Turn off holding pump.

16. Open high vacuum valves #1 & #2. After a few minutes the chamber pressure will again be at 5×10^{-5} torr.

To operate glow discharge without holding pump (not recommended but doable). Run glow discharge cycle <u>before</u> heating D.P.'s using this procedure.

- run glow discharge cycle <u>before</u> heating D.P.'s
- close rough valve
- open leak until TCI reads 25 millitorr
- open rough valve (now TCI will stay at 25 millitorr)
- turn on glow discharge
- turn on pressure control
- turn up glow discharge power to .5 amp (≈40 on dial) (inspect visually the aurora)
- run ten minutes

MANUAL FIRING OF FILAMENTS

To evaporate aluminum (M.P.=660°C) from outgassed tungsten filaments which are loaded with aluminum loops at each end.

Chamber pressure $\leq 5 \times 10^{-6}$ torr.

1. Program the Inficon thickness monitor with the following parameters: Aluminum Density = 2.70 g/cm^3
   Z ratio = 1.08
2. Turn cycle selector to "manual" position.
3. To fire all filaments simultaneously, turn all 4 filament ring power switches to the "ON" position.
4. Slowly raise power to all rings until inner ring #2 ammeter reads <u>330 amperes</u>.
5. Within 5 minutes the aluminum loops will melt and the molten aluminum will be drawn to the center of the filaments by the "wetting" action of the molten aluminum for the stranded Tungsten filament. As the molten aluminum reaches the hotter surface of the central region of the Tungsten filament it will begin to evaporate.
6. The Inficon crystal monitor will begin to read a rate of aluminum deposition of 1 to 2 Angstroms/second.
7. When the Inficon monitor reads a thickness of about 50 angstroms increase the power on all rings until the voltage on inner ring #2 reads <u>25 volts</u>.
8. The Inficon monitor should now indicate a deposition rate of about 30/second.
9. When the Inficon reads a total thickness of approximately 600 to 650 the power on all rings should be returned to zero and all power switches turned off.
10. An Inficon reading of 650 Angstroms yields a coating thickness of 900 Angstroms measured with the Angstrom-scope, interferometer.
11. See: Shutting Down System.

SHUTTING DOWN ALUMINIZING SYSTEM

After outgassing or aluminizing operations have been completed it will be necessary to follow these steps to discontinue vacuum chamber operation, prior to opening.

1. Start the holding pump.
2. Turn off LN_2 supply and disconnect dewars from Meissner trap and LN_2 manifolds.
3. Close high vacuum valves #1 and #2.
4. Turn off chamber seal pump.
5. Turn off chamber ion gauge and/or cold cathode gauges.
6. Turn off diffusion pumps. (Approximately 2 hr. cool down required).
7. Open holding pump valves to diffusion pumps.
8. Close foreline valves #1 & #2.
9. Turn off roughing pump. (Manually vent pump to atmospheric pressure. Air venting of pump is accomplished via manual valve on roughing manifold).
10. Leave glycol cooling on for 2 hrs. (Do not use rapid cooling).*

If chamber is to be opened:

11. Check again to be certain high vacuum valves #1 & #2 are closed. (Rapid oxidation of hot diffusion pump oil can lead to a serious explosion)!
12. Slowly open chamber air-release valve. Total venting back to atmospheric pressure takes approximately 20 minutes.
13. Disconnect the roughing pump from the chamber vacuum manifold.
14. Raise chamber about 50mm after it has been brought back to atmospheric pressure.
15. Walk around chamber to be sure all hoses and wires are free and clear and that there is ample slack to permit full upward motion of chamber.
16. Check the position of the overhead crane bridge to allow clearance and then switch crane power to "off" position.
17. Raise chamber to fully open position against up-limit switch.
18. Carriage drive switch can now be used to move bottom of vacuum chamber to desired position.
19. For best long term chamber performance it is necessary to leave the chamber at a pressure of 10 to 100 microns. This is easily done with the roughing pump only.
    (See: Pump down operation summit vacuum chamber checklist).

*See manufacturers' data.

MIRROR STRIPPING, CLEANING, AND COATING SUPPLIES CHECKLIST

Items:

1. 5 Natural Chamois[3], well washed in Liquinox solution.
2. 8 Natural Sponges[3], purified by pounding and HCL acid soak.
3. 4 Acid Vapor Masks[5]
4. 4 liters Photrex Methanol Absolute[1] (Baker Reagent)
5. 4 liters Trichloroethylene[1] (Baker Reagent)
6. 4 liters Xylenes[1] (VWR Reagent)
7. 4 liters Acetone[1] (U.S.P.-F.C.C Baker)
8. 4 liters Liqui-Nox[1] Detergent Concentrate
9. 1 Kg. Calcium Carbonate Powder[1]
10. 2 cartons of "Miracloth" material
11. 1 Kg. Potassium Hydroxide Pellets[1] (Baker Reagent)
12. 1 Kg. Sodium Hydroxide Pellets[1] (Baker Reagent)
13. 2 Kg. Cupric Sulfate 5-Hydrate[1], Fine Crystal (Baker Reagent)
14. 20 liters 1 Normal Hydrochloric Acid[1] (Baker Reagent)
15. 2 Boxes "Pylox" gloves[5]
16. 2 Boxes Neoprene gloves[5]
17. 2 Boxes Nitrile Rubber gloves[5]
18. 4 pair protective goggles[5]
19. 1 face shield[5]
20. 5 Nalgene Mixing Buckets[1]
21. 20 Boxes x 90 wipes each "Kaydry" paper towels (VWR)[1]
22. 10 bags x 30 pads each cotton wipers (Balzers)
23. 10 PVC yellow Tyvek Jumpsuits[4] (Large)
24. 10 Tyrel White Jumpsuits[4] (Large)

25. 10 Surgeons Caps

26. 10 Surgeons Masks[5]

27. 6 pair of rubber boots[5]

28. 1 box of plastic booties

29. 1 garden hose (50 ft.) with outlet end cut off

30. 40 gallons of De-ionized water

31. 4 water filters

32. 1 large roll of Polyethylene film[4]

SUPPLIERS

1. VWR Scientific,
   P. O. Box 29697
   Honolulu, HI 96820

2. Cole-Parmer Instrument Co.
   7425 North Oak Park Avenue
   Chicago, ILL. 60648

3. McMaster-Carr Supply Co.
   P. O. Box 54960,
   Los Angeles, CA 90054-0960

4. Consolidated Plastics Company, Inc.
   1864 Enterprise Parkway
   Twinsburg, Ohio 44087

5. Lab Safety Supply
   P. O. Box 1368
   Janesville, WI 53547-1368

La Silla

Presentation by A. Gilliotte

WORKSHOP

ESO

SUMMARY AND PRESENTATION OF CURRENT PRACTICE AND EXPERIENCE ON WASHING AND COATING MIRRORS

Alain Gilliotte Optics Section

TOPICS:

1. INTRODUCTION: LA SILLA FACILITIES

2. A COMPLETE PROCESS: 3m60
   - WASHING / ALUMINIUM REMOVAL
   - COATING PROCESS
     - PLANTS
     - COATING PREPARATION
     - COATING PROCESS: procedure

3. LIMITATIONS / IMPROVEMENTS

INTRODUCTION

LA SILLA : 13 Telescopes

THEN 13 MAIN MIRRORS

LA SILLA : 2 ALUMINIZATION PLANTS

ONE FOR LARGE MIRRORS:

3m60, NTT, 2m20

OTHER FOR SMALLER MIRRORS

1m54 D, 1m50, 1m40 CAT

Schmidt, 1m00, 0m90 DUTCH

0m63 Bochum and Two 0m50 Swiss.

LASILLA TECHNICAL STAFF TRS

Technical Research Support

MECHANICIANS: Telescope dismounting
Mirror Handling

OPTICIANS: MIRROR WASHING AND ALUMINIZATION.

NO VACUUM SPECIALISTS.

MIRRORS ARE REALUMINIZED EVERY TWO or THREE YEARS ACCORDING VISUAL INSPECTION OF THE STAIN DEGREE (OIL, WATER, BIRD MARKS).

BETWEEN TWO ALUMINIZATIONS, THE MIRRORS ARE WASHED TWO TIMES.

THE OLD WET SPONGE SOAP WASHING HAS BEEN REPLACED SINCE 6 MONTHS BY CO_2 SNOW TECHNICS.

—

MIRROR ALUMINIZATION IS PERFORMED ON 3 or 4 DAYS ACCORDING COMPLEXITY OF MIRROR DISMOUNTING [3m60 5 days minimum].

MIRRORS ARE HANDLED BY MEANS OF TRANSPORT RING or SPIDER GRAB

MIRRORS ARE TRANSPORTED IN SPECIAL CLEAN BOXES TO THE ALUMINIZATION PLANT

—

THE PLANTS ARE INSTALLED IN THE 3m60 AND 1m50 STORAGE AREA - THEY ARE NOT ARRANGED AS CLEAN ROOM

BUT FLOOR IS WASHED A DAY BEFORE THE PROCESS.

A MAJOR CLEANING IS PROBLEMATIC :

ACCESS, WALL PAINT QUALITY, GRANE...

—

ALL CLEANING PROCESS IS PERFORMED CLOSE TO THE COATING CHAMBER

—

SMALL MIRRORS ARE INSTALLED ON A WASHING BOWL LOCATED UNDER AN AIR SUCTION HOOD (FOR CHIMICAL VAPOR EVACUATION)

LARGE MIRRORS ARE INSTALLED OVER 3 SUPPORT PADS ON THE FLOOR (PLASTIC).
LARGE CURTAIN DOORS CLOSED THE AREA DURING THE WASHING.

—

LA SILLA TELESCOPE MIRRORS ARE DONE WITH PYREX, SILICA (FUSED) (DIFFERENT DOPING) AND ZERODUR
MIRROR CHEMICAL WASHING IS IDENTICAL FOR ALL OF THEM. NO SPECIAL T° OR HUMIDITY REGULATION ARE PERFORMED.

—

COATING PROCESS IS PERFORMED WITH TUNGSTENE COILS; MIRRORS ARE MOUNTED VERTICALLY IN THE VACUUM CHAMBER.

COATING PROCESS CHECK LIST

HAVE BEEN DELIVERED WITH THE EQUIPMENT
FEW POINTS WERE ALTERED TIME TO TIME
ACCORDING THE EXPERIENCE.

3m60 PLANT WAS DELIVERED BY HVEC
IN 1975, 1m50 PLANT BY EDWARDS
IN 1967.
FEW DETAILS DIFFER ON THE PLANT
UTILISATION.

—

QUALITY CONTROL OF COATING IS
PERFORMED BY VISUAL INSPECTION
AND MAPPING OF THE DEFECTS.

ALUMINIUM THICKNESS IS MEASURED
BY INTERFEROMETRIC METHOD
ON SPECIAL WITTNESS PLATE
MOUNTED ON THE MIRROR
EDGE DURING THE PROCESS

—

3m 60 ALUMINIZATION PROCESS

MIRROR DISMOUNTING IS AWKWARD AND TIME-CONSUMING PROCEDURE.
MIRROR IS HANDLED FROM TELESCOPE FLOOR TOWARDS THE FIRST FLOOR BY MEANS OF A SUPPORT RING.
MIRROR IS LOCATED CLOSE TO THE VACUUM PLANT AND REST OVER 3 PADS.
ALL DOORS ARE CLOSED (STORAGE AREA, TRAP DOOR ....)

WASHING PREPARATION

ALL WASHING PRODUCTS AND TOOLS ARE LOCATED ON A TABLE CLOSE TO THE MIRROR
CHIMICALS, GLOVES, MASKS, COTTON WOOL AND TISSUES, OPTICAL PAPER ....
PAPER IS FOLDED BY SET OF TWO SHEETS AND PILED UP ON THE TABLE.

A TANK OF 50 LITERS of DISTILLED WATER IS LOCATED CLOSE TO THE TABLE.

TWO WATERSPOUTS ARE CONNECTED TO A FILTERED (PARTICLES) WATER PIPE.

OPTICIAN TEAM DRESS WITH VINYL CLOTHES AND MASKS (AGAINTS CHIMICAL GAZ)

6 peoples ARE REQUIRED : (3 m 60)

4 OPTICIANS FOR WASHING

2 OTHER'S FOR PRODUCT DISTRIBUTION

ONE OPTICIAN GOES ON THE MIRROR CENTRAL HOLE, THE 3 OTHER'S ROTATE AROUND THE MIRROR EDGE -

WASHING AND ALUMINIUM REMOVAL

ALONG THE MIRROR CENTER HOLE WE FORMED A COTTON WOOL DIKE TO MAINTAIN LIQUID OVER AT LEAST A $\frac{1}{3}$ OF MIRROR RADIUS.

PROCEDURE:

1- TAP WATER RINSE ≃ 20' ACCORDING MIRROR SIZE

DUST/PARTICLES REMOVAL
MODERATE JET FORMED BY FINGERS WITH THE HOSE
MAJOR AMOUNT REMOVED / DIFFICULT TO QUALIFY ON WET SURFACES

2- NAOH 5%. ≃ 20' ACCORDING MIRROR SIZE

ALU REMOVAL BY CHIMICAL PROCESS.
LIQUID USED: ≃ 15 LITERS ACCORDING ALU RESISTANCE AND SURFACE
COTTON WOOL ALLOW LIQUID SPREAD OVER MIRROR EDGE - ONLY SOFT CONTACT.
AROUND 90% OF ALUMINIUM REMOVED (DEPENDS ON ALUMINIUM ADHERENCE).

3- FIRST RINSE ≃ 5'

COTTON WOOL DIKE REMOVED.
TAP WATER RINSE OF NAOH.

4- Hydrochloric Acid 5% ≃ 10' (12)
+ $CuSO_4$
Residual Al removal - 7 liters
Same process as NaOH (cotton wool dike)
Gaz mask (Cl gaz protection)
All aluminium removed

5- Second Rinse

First with tap water ≃ 20'
Then with distilled water ≃ 10'
Mirror surface acid neutralization
> 25 liters

6- Alcool (propanol 99.7%) Rinse 5'
Water / residual removal - 5 liters
Alcool spread over the surface
with optical paper hold on one
edge and moved slightly -
Hand (finger) contact avoided.
This manipulation of paper is done
with bare clean hands
(to avoid vinyl glove contamination

7- MIRROR DRYING

≈ 10' ACCORDING T° AND MIRROR SIZE

ALCOOL (PROPANOL) IS CONTINUOUSLY DISTRIBUTED OVER THE SURFACE FROM THE CENTER TOWARDS THE EDGE. (TO REMAIN WET ALL THE SURFACE ON THE SAME TIME)

3 OPTICIANS (+ ONE ON THE CENTER) ROTATE AROUND THE MIRROR WITH 120° RELATIVE POSITIONS.

OPTICAL PAPER IS CHANGED SEVERAL TIME TO HELP SURFACE DRYING.

WHEN MIRROR SURFACE TENDED TO DRY, THE PAPER IS REPLACED BY COTTON WOOL TISSUE.

BY SOFT HAND CONTACT OVER THE PAD TISSUE WITH FAST CIRCULATION MOVES THE MIRROR IS CLEANED OF ALL RESIDUAL WET SPOT.

MIRROR IS CLEAN. BY VISUAL CHECK WITH STRONG ILLUMINATION EVENTUAL CLEANING STAIN MAY REMAIN -

A NEW PROCESS OF ALCOOL CLEANING

MUST BE DONE.

THE SUCCESS OF ALCOOL DRYING DEPENDS HOW FAST THE CIRCULATION OF COTTON TISSUES IS DONE. (WITH ALSO A FAST MOVE OF OPTICIAN AROUND THE MIRROR).

BY EXPERIENCE A SECOND CLEANING IS ALWAYS COMPULSORY.

—

MIRROR REMAINS "OPEN" TO DUST, PARTICLE CONTAMINATION UNTIL ITS MOUNTING ON THE VACCUM CHAMBER.

JUST BEFORE CLOSING THE CHAMBER, A THOROUGH DUST REMOVAL IS DONE WITH A 40cm long ANTISTATIC BRUSH. (STARTING ON TOP OF THE VERTICAL) MIRROR.

—

CLEANING PROCESS : ≈ 110'

FINAL MOUNTING ON DOOR : ≈ 150'

—

WITNESS MIRRORS (4) ARE MOUNTED ON THE EDGES AND ON THE CENTER.

—

OPERATIONS FOR NTT AND 2m20 MIRRORS ARE IDENTICAL.

THE ONLY DIFFERENCE CONCERNS THE MIRROR HANDLING.

3m60 → HANDLING RING

NTT / 2m20 HANDLING HOOK ON MIRROR CENTER.

ALL SMALLER MIRRORS ARE HANDLED WITH SPIDER GRAB. THE MIRROR FIXATION IN CHAMBER IS DONE ON THE MIRROR EDGE. (VERTICAL MIRROR)

COATING PROCESS

THE TWO PLANTS

3m60

VACUUM :
- ROUGH piston PUMP (ROTARY piston) KINNEY
- BOOSTER ROOTS PUMP KINNEY
- OIL DIFFUSION PUMP VARIAN + LN_2 BAFFLE
- GLOW DISCHARGE

EVAPORATORS – TWO RINGS

OUTER FOR Large Mirrors

INNER " SMALL MIRRORS (2m20)

- OUTER WITH 60 Coils
- INNER " 36 Coils

POWER IS SEPARATED IN 3 PARTS

→ PROCESS OUTER RING : 3 × 20 Coils

→ PROCESS INNER RING : 3 × 12 Coils

ALUMINIUM : ALUMINIUM WIRE

OUTER RING : Coil of 10 Turns
4 Hooks ϕ 2 x 18 mm

INNER RING : Coil of 10 Turns
4 Hooks ϕ 1.5 x 16 mm

BOTH RINGS LOADED FEW DAYS PRIOR ALUMINIZATION – KEEP 10^{-2} TORR VACUUM UNTIL CHAMBER OPENING FOR MIRROR LOADING

MIRROR FIXATION : VERTICALLY BY MEANS OF A CENTRAL FIXATION SUPPORT MOUNTED ON THE CHAMBER DOOR.

1m50

VACUUM : – ROUGH PISTON PUMP . (SPEEDIVAC)
– OIL DIFFUSION WITH WATER COOLED BAFFLE. (SPEEDIVAC)

EVAPORATORS: 24 Coils

MOUNTED ON THE BACK
PART OF THE CHAMBER

POWER : 6 x 4 Coils
ONLY 4 COILS CONTROLLED
ON THE SAME TIME.

ALUMINIUM: WIRE

EACH COIL of 10 TURNS
LOADED WITH 6 HOOKS
ϕ 2mm 28 mm long.

LOADING IS PERFORMED FEW DAYS AGO

MIRROR FIXATION: HORIZONTALLY

CHAMBER DOOR ROTATED HORIZONTALLY
FOR MIRROR LOADING (SPIDER GRAB)
FIXATION IS DONE ON THE MIRROR
EDGES BY MEAN OF SPECIAL
SUPPORT ACCORDING ϕ MIRROR.

THEN DOOR IS ROTATED VERTICALLY
TO CLOSE THE CHAMBER.

COATING PREPARATION

VACUUM CHAMBERS ALLWAYS UNDER 10^{-2} Torr WHEN NOT USED.
FEW DAYS BEFORE THE CHAMBER IS OPENED AND COIL ARE EXCHANGED AND LOADED WITH Aluminium Hooks.
ONE PEOPLE IN CHARGE OF MAINTENANCE CHECK THE EQUIPMENT.

COATING PROCESS

WE NORMALLY USE CHECK-LIST.
SEVERAL POINTS HAVE BEEN MODIFIED ACCORDING EXPERIENCE.

- 3m60 Rough pump Turned on once MIRROR LOCATED INSIDE THE CHAMBER (Exhaust Oil VAPOR MAY CONTAMINATE THE MIRROR SURFACE)

PROCEDURE:

- Rough pumping THE CHAMBER
  UNTIL PRESSURE REACH 10^{-2} RANGE
  3m60 plant : 80'
  1m50 plant : 40'
- Rough pumping Diffusion Pump
  WITH 10^{-2} Torr : → HEATING PUMP OIL
  3m60 plant : 60'
  1m50 " : 40'
  After 30' Heating <u>3m60</u> → LN_2 ON
  AND 20' ARE REQUIRED FOR COOLING
  THE BAFFLE
- SECONDARY PUMPING
  UNTIL PRESSURE REACHS 10^{-5} RANGE
  3m60 : 90' 1m50 : 50'
- GLOW DISCHARGE
  <u>3m60</u> : High VACUUM VALVE CLOSED
  A BYPASS VALVE IS OPENED
  AND A CONTROLED OUTSIDE
  AIR LEAK ALLOWS 5 10^{-2} Torr
  1600 V Are Applied
  0.5 A DISCHARGE CURRENT
  20' process

1h50 : High vacuum valve is partially closed
Air inlet valve allows
5 10^{-2} Torr required.
15' process

- FINAL PUMPING

3h60 : 10^{-5} range ≈ 30'

1h50 : 10^{-5} range ≈ 30'

- ALUMINIUM EVAPORATION

3h60 : BOTH RING ARE USED

FOR EACH ONE, THE VOLTAGE IS INCREASED (SIMULTANEOUSLY ON THE 3 SECTORS of 20 coils each) SLOWLY by remote push SUTTON.
WATCHING THE FILAMENTS VIA TWO PULL EYES.
ONLY 3 FILAMENTS ARE VISIBLE.
AFTER FEW STEP INCREASE, ALUMINIUM MELT.
WE MUST THEN INCREASE VERY

SLOWLY IN WAY TO INSURE
A CORRECT ALUMINIUM MELTING
FOR ALL COILS (current decrease
when ALUMINIUM Liquid WET the Coils)
≃ 15'

THEN VOLTAGE IS INCREASED FASTER
UNTIL COMPLETE EVAPORATION
(checked only on the 3 VISIBLE COILS)

OPERATION IS REPEATED WITH THE
3 × 12 coils OF THE INNER RING.

1m50 ONLY 4 COILS ARE POWERED
SIMULTANUOUSLY.
THE OPERATION IS THEN DONE
6 TIMES TO VOPORATE ALL
24 coils.
VISIBILITY OF COIL IS MORE
EASY AND ALUMINIUM MELTING IS
MORE EASELY checked.

BOTH chamber ARE VENTILED IMMEDIATLY.

MIRROR ALUMINIZATION QUALITY IS VISUALY checked and SYSTEMATIC defect mapping IS performed.

WITNESS GLASS ARE THEN TESTED. IN WAY TO APPROXIMATE THE DEPOSITED ALUMINIUM THICKNESS.

LIMITATIONS:

- TOO SHORT ALLOCATED TIME
- MIRROR HANDLING TOO COMPLEX AND LONG TIME CONSUMING.
- HANDLING TOOL NOT EASILY WASHABLE.
- NO SAFE PROTECTION OF MIRROR SURFACE DURING HANDLING.
- DUSTY AMBIANT →
- CONTACT CLEANING → SURFACE SCRATCHES
- INEFFICIENT GLOW DISCHARGE
- TOO MANY COILS POWERED SIMULTANUOUSLY.
  - → MELTING CONTROL DIFFICULTY
  - → POSSIBLE DROPLETS
  - → POSSIBLE ALU PROJECTIONS
    LOSS OF ALU → 2 RINGS
  - → TOO LOW SPEED EVAPORATION
- VACUUM EQUIPMENT

A VISIT OF OUR ESO VACUUM SPECIALIST HELP US TO START MODIFICATIONS.

IMPROVEMENTS

- CLEAN ROOM CONCEPT WITH PUMPS LOCATED OUTSIDE
- AIR FLOW ROOF FOR MIRROR WASHING PROTECTION AGAINST DUST
- DUST REMOVAL WITH CO_2 SNOW PRIOR ALUMINIZATION OR PEEL STRIP COATING (Deep cleaning with DUST, ORGANIC, ... REMOVAL)
- NON CONTACT ALCOOL DRYING
- SEPARATE POWERING OF FILAMENTS COMPUTER CONTROLLED (SIMULTANUOUS MELTING AND EVAP.)
- ARGON GAZ GLOW DISCHARGE.

AND A CONTINUOUS MIRROR CLEANING WITH CO_2 SNOW AND peel-off STRIP COATING TO INCREASE TIME PERIOD BETWEEN TWO ALUMINIZATIONS

Mt. Palomar

Presentation by R. Thicksten

CALIFORNIA INSTITUTE OF TECHNOLOGY

PALOMAR OBSERVATORY

PROCEDURE FOR WASHING AND ALUMINIZING THE 200 INCH MIRROR

Revised
September 21, 1991

Edited from the notes of:

Earl Emery
Bruce Rule
Robert Thicksten

Preparation for Mirror Wash

Inspect the surface of the mirror to determine if there is any material which may have come in contact with the surface that may need special cleaning attention.

Oil is removed by using solvents before preceding with soap wash.

> During the wash it is necessary to prevent water from getting into the cell area below the mirror where the delicate support system for the mirror is located. To prevent this, a Mylar dam is placed around the perimeter of the mirror and should protrude about 4 inches above the surface. A skirt is then taped below the dam to prevent any over-spills or leaks in the dam from reaching the cell. A pan is installed in the center of the mirror, and is sealed to the glass with an O-ring and bolt-on clamp assembly. The pan is supported by the flange that carries the coude' pedestal. In the center of the pan is a lifting handle which, after installation, is replaced by a drain assembly which passes liquids through the mirror and cell below.

Clean the outside perimeter of the glass with acetone and alcohol so that tape will adhere well.

Tape a plastic drop-cloth around the perimeter of the glass about 12 inches below the lip edge and let it extend down below cell.

Put double-sided, 4 inch wide masking tape around the perimeter as close to the lip as possible.

Attach/Install a single 8 inch wide Mylar (or similar acid resistant material) to double sided tape and the seal bottom edge with 4 inch wide gaffers tape. Note that Mylar should extend about 4 inches below and about 4 inches above the lip of the glass.

Apply second course of gaffers tape over and extending about 3 inches below the first.

Install the center pan using O-ring and drain tube. Make sure the bottom pass-through plate has been removed for the tube to pass through.

Install the drain hose from the drain tube to floor drain.

Make sure all sponges, buckets and chamois are thoroughly cleaned in Orvus and distilled water before the wash.

MIRROR WASH

Soak

Mix about 1/4 cup of Orvus soap with about one gallon of distilled water in a plastic bucket. Make up 3 to 4 buckets. Have one person standing by to make fresh soap solution as needed.

> Do not use tap water which might contaminate the sponges with particles that could scratch the mirror.

Wet the surface with the soap solution and keep it wet for a period of 15 to 20 minutes to allow the soap to lift and float away as much dirt as possible.

> Note that it is important that from now until the mirror is dried, it be kept wet in order to prevent drying marks.

Rinse

Rinse using filtered tap water at low pressure through an ordinary garden hose (all metal fittings removed) for about 10 minutes. Pay special attention to the Mylar to mirror gap as soap will collect there.

Wash

When the rinse is complete, a worker is placed in the center of the mirror. This worker, along with other members of the wash team gathered around the perimeter, begin patting the surface with sponges soaked with Orvus soap and distilled water.

> The procedure is to pat the surface 3 to 4 times, turn the sponge over, pat 3 to 4 times again and then rinse the sponge in the soap bucket. The idea behind this patting procedure is that debris that might scratch the surface is picked up and discarded before doing so. Rubbing could, of course, carry the debris across the surface and scratch it.

Rinse

After the entire surface has been patted/washed it is again rinsed for 10 to 15 minutes and then washed again. Be sure to change bucket solution, at the least, between every wash.

If the mirror is to be aluminized, proceed to ACID WASH section.

Clean Sponges

After the second wash, wash the sponges thoroughly to insure that no particles that might have been picked up by the sponges during the patting wash remain.

Wash

With clean sponges, apply the soap solution to the surface in a wiping motion - do not press down, but rather drag the sponge across the surface. Rinse in soap solution after 2 long swipes - one each side of sponge.

Rinse

Rinse with tap water 10 - 15 minutes.

Wash

Repeat wash, this time using light pressure in sponges when wiping.

Rinse with tap water a minimum of 20 minutes, during which time the man can be removed from the center of the mirror and the Mylar dam can be removed. Do not allow the mirror to dry!

Using distilled water poured from buckets, rinse the mirror with about 15 gallons.

Dry the mirror with clean chamois.

ACID WASH

After a hose rinse, respirators and protective clothing are put on by workers to protect them from the acids and caustic chemicals that will be used to remove the aluminum coating. Also, fans are set up to suck fumes from the work area and exhaust them outside.

Apply Green River Solution

A solution of 1 quart hydrochloric acid, HCl, mixed with 2 quarts water and 1 ounce cupric sulfate, $CuSO_4$, makes up what is referred to as "Green River" solution (the cupric sulfate having turned the diluted acid green).

This solution is carefully poured from plastic buckets over the surface from the perimeter. A dam of disposable, lent-free paper lab towels is normally placed around the mirror, about half way to the center. Another dam is placed around the center hole of the mirror. These dams will slow the flow of the acid from the surface and allow more time for the chemical to dissolve the aluminum. After a few minutes,have workers begin wiping the surface with lab towels to aid in the removal of the aluminum. This is a dangerous time in the aluminizing process, as workers must stretch out over the glass to reach the entire surface. The worker that is in the center pan must position himself in a squatting position as one cannot kneel in the acid that is flowing to the drain beneath him. Also workers must be careful that the fume masks and safety goggles are well secured - if they fall off and hit the surface, damage to the mirror could result. After about 5 to 10 minutes the honeycomb structure of the Pyrex glass is evident.

Rinse

After about 30 minutes or so, if there is no longer any evidence of aluminum, all lab towels are removed and a 10 minute hose rinse is begun.

Apply Potassium Hydroxide KOH solution, followed by Calcium Carbonate.

The next step is to apply a caustic solution to the surface to remove any aluminum particles which still may be adhering to the surface.

Mix 1 part KOH with 25 parts water and apply evenly over the surface.

Again, dams are placed on the surface, and after application, the solution is agitated with lab towels. After 2 to 3 minutes, $CaCO_3$ powder is dusted/spread over the surface. Using lab towels, the

powder is mixed with the KOH solution on the surface and then this mixed solution wiped over the surface for about 5 minutes - rinse before drying starts.

Repeat.

Rinse

Rinse for about 30 minutes - pay special attention to the dam, the $CaCo_3$ will want to stay between the glass and Mylar.

Apply nitric acid solution.

Mix 1 part HNO_3 with 1 part water and apply to the surface - do not leave this on the glass for more than 5 minutes.

Apply the diluted solution of nitric acid over the surface - again dams are used and the solution agitated with lab towels.

Rinse

Rinse for about 30 minutes - again, pay special attention to the dam area.

All protective clothing can now be removed and returned for washing and storage.

At the end of the rinse the Mylar dam is carefully removed to insure that there is no splash-back from the wet Mylar to the glass surface. During this, as well as preceding steps , no part of the surface is allowed to dry. If any portion of the surface dries, there will be some type of drying mark left which means returning to an acid wash.

Final Rinse

Distilled water, about 20 gallons, is now poured over the glass. As some water will go over the outside perimeter, workmen standby to mop up any spills.

The skirt which has protected the mirror cell is now removed.

DRYING AND ETHYL ALCOHOL WIPE-DOWN

Disposable lint free cotton gloves are put on and the mirror surface is dried using lint-free disposable paper lab towels. Towels are changed frequently.

Once the surface has been dried, immediately precede to wiping the surface with ethyl alcohol. A lab towel is held in one hand and a plastic squeeze bottle is used to apply a small amount of alcohol to the towel. The towel is then wiped across the surface in one pass and discarded. After about 20 minutes of wiping with alcohol, "black breath" tests are begun.

Breathing onto the surface should spread a even layer of moisture which will be evident for a few seconds when viewed against a distant light source (our fluorescent work-lights work OK for this). During the few seconds available, wipe marks or other surface defects will be apparent. When the breath test shows a smooth even surface stop wiping. The alcohol bath can take an hour or more.

Wipe the perimeter/side of the glass with ethanol.

The mirror is immediately placed into the tank and pumping begun.

PREPARATION FOR ALUMINIZING.

It is a good idea to test the system a month or so ahead of the engineering/aluminizing run to insure that the system is functioning properly, all gauges are working etc. In the past, opticians have even melted the aluminum on to the filaments during this test procedure. Experience has shown that melt-in is not necessary.

Verify that electrical leads in the tank lid have been changed from the melt-in mode (single filament firing) to the mode for pair firing and fast firing. At this point the tank lid should be on it's supports on the observing floor.

Inspect the filaments visually.

Replace broken filaments and its firing partner using 8 loop filaments.

Load filaments. Wearing clean cotton gloves, use the special long-nosed pliers to install 3 loops of aluminum per filament (315 filaments in all). Each loop is 0.47 inch long aluminum wire, 0.040 inch in diameter. For fast fire filaments (total 35) use 5 loops of aluminum.

Check for continuity and possible shorts of all filaments using an ohm meter.

Record which filaments were replaced in the filament log-sheet.

Clean the tank. Remove debris, clean surfaces with solvent (acetone) as needed.

Check that the tank-to-mirror O-ring is clean, greased (silicone vacuum grease) and properly seated.

Insure that the port windows inside the tank lid have been stripped and cleaned for easy viewing of the glow discharge and filament firing.

On the tank lid, clean and grease the main flanges that seal to the rubber grooves in the base. Also clean & grease the base grooves.

If desired, put several clean glass test slides/plates on the stainless steel plug in the Cassegrain hole and around the outer shelf for possible test purposes.

Assemble Tank

With the mirror prepared, raise the four guide posts into position and lift the tank over the mirror. Lower the tank slowly until the O-ring mirror seal is a few inches above the lip of the mirror. Using a bright light source, watch to insure that the O-ring does not come off as the tank is lowered around the mirror. Stop - when the tank is about 4 inches from contacting the cart. Raise the cart until contact is made and slack is apparent on the lifting cables.

Lower the crane hook and disengage.

Lower the cart so vacuum ports are ready for contact. At this point the tank is separated from the pumping manifold by 2 feet or so. Clean upper and lower flanges and clean and grease (lightly) O-rings on manifold and roughing interfaces between tank and pumping system.

Move tank into contact with the vacuum ports; align and bolt upper and lower ports together.

Put the pair firing transformer (same as for 84" tank) and fast fire transformer on top of the tank at a convenient place towards the direction of the aluminizing console (control). Do not put these transformers on the tank before this step or the tank will be unbalanced for lifting.

PUMP-DOWN

On the observing floor:

Activate all circuit breakers

Turn on air compressor for pneumatic valves

Turn on water cooling to all 3 roughing pumps

Make sure drain-hoses are properly located.

Make sure water is flowing through each pump.

At the Control Console:

Install water lines to intermediate and bypass D.P.s. Check water flow.

Install gauges to tank.

Install glow discharge and other electrical to tank.

Turn on main power.

Check control board to insure all valves are closed.

Turn on the TC gauges.

Prepare pump-down chart recorder to record tank pressure.

Turn on the 3 roughing pumps (Stokes, Kinney, & LeBold) and monitor their individual, isolated base pressures. They should reach less than 50 microns in less that 15 minutes.

Open the Stokes pneumatic valve, RV2 to the D.P.s and fore-line.

Open the two mechanical gate hand valves, BV1 & BV2 one for each pump at about foot level on the D.P.s.

When the D.P. fore-line pressure is less than 50 microns turn on D.P.'s and the 2 refrigeration compressors for D.P. cold traps (on observing level).

Turn on the 2 separate water valves for D.P. cooling. The water temperature should be stabilized, by regulating flow, at 115 - 120 F. This takes about an hour.

The tank may be rough pumped while the D.P.'s are heating up using the Lebold and Kinney to pump the tank. Open the pneumatic valves, RV1, FV2,RV3 & RV4 between the pumps and the tank. Make sure the valve FV1 to the D.P.s from these pumps stays closed.

While the tank is pumping down connect the firing circuits. The fire lead of the small transformer connects to the inner or outer lug, with a shorting cable between inner & outer lug. The large transformer hot leads connect to lugs marked 1 through 10 on the Lucite bar. Both transformer ground leads connect to bolts on the steel structure. Make sure all Variacs are turned off and all knife switches are open.

When the tank pressure is below 1000 microns, (30 minutes or so) activate blower switch from time to time. When the pressure is low enough the blower will stay on. The pressure will fall fairly quickly (15 minutes) below 10 microns.

When the tank is below 50 microns, close valve FV2 and open valve FV1 to put the Kinney on backing for the D.P.'s along with the Stokes. This leaves only the Lebold roughing the tank.

When the tank is below 50 microns, turn on the emergency bypass and intermediate D.P.'s. Check water cooling and proper heater operation on these 4 pumps.

Turn on ion gauges.

Turn on the chart recorder.

Monitor D.P. gauges ION 2 & ION 3 to ensure they are working properly - the pressure should be at or approaching 10^{-5} ~~mi-crons~~ TORR.

When the bypass, intermediate and main D.P.s have come to temperature and the high vacuum ion gaugeS ION 2 & ION 3 indicates a pressure of less than 25 ~~X 10~~ microns, open D.P. gate valve DPV1 or DPV2 making sure the fore-line pressure does not exceed 100 microns (GAUGE TC1) for more than 30 seconds. It may be necessary to cycle the valves open and closed a few times.

The pump down will take about 5-6 hours to about 1×10^{-5} ~~mi-crons~~. After the tank pressure has reached about 1×10^{-3} ~~mi-crons~~ TORR (about 2 hours), fill the liquid N2 trap. Carefully monitor the filling of the large plate surrounding the filler hole. It has an O-ring seal. Avoid spilling Ln2 around the filling hole. Ln2 could freeze the O-ring seal and cause a leak.

<u>Glow Discharge</u>

When the tank pressure is about 1×10^{-5} ~~microns~~ TORR, initiate the glow discharge procedure. connect an oxygen cylinder to the Kerotest valve on the tank feed-through. Set the pressure to 3-5 p.s.i. (Flush the air out of the hose before connection)

Isolate the tank by closing the main roughing valve RV1 and the gate valves DPV1 & DPV2 on both D.P.s. Crack the kerotest valve very slowly and let the pressure as read on gauge TC6 rise slowly to 30 microns.

Turn on glow discharge (control console) and run current up to 10 amps (200 V) for 3 minutes. Monitor and control the current button (up - down) as the current can fluctuate fast and considerably. Observe the glow discharge through the port - if the there is a lot of arcing, lower the current a bit, but not so low that the glow cannot be seen.

After glow discharge, open the roughing valve RV1. After a couple of minutes the pressure should be less than 10 microns Open the D.P. gate valves DPV1 & DPV2 one at a time; the fore-pressure as measured at gauge TC1, should not exceed 100 microns - as before.

Repeat the Glow discharge 6 times. After each cycle, the pressure should return the previous value in 20 - 25 minutes or so. Proceed to next cycle.

After last glow discharge, wait for vacuum to be near 2×10^{-5} TORR ~~microns~~. Make sure the liquid nitrogen trap is full.

Filament Firing

Activate paired firing circuits. Set the Variac to 105 volts. Install clamp-on ammeter and the chart recorder clamp-on ammeter to monitor proper time on of filaments. Note: you will be moving the rotary selector though 360 degrees - 0 - 180 paired filaments, avoid getters marked G (obsolete).

Prepare chart recorder.

Attach the recorder's clamp-on amp meter to one of the firing lines. This meter will not give any indication while plugged into the recorder. Use another meter, attached to the same line, to calibrate/measure/check current as recorded on the chart.

Check that there is at least a 1/4 roll of chart paper in the recorder.

Put the 'v/mv' to the 'v' position.

Put the 'var/cal' to the 'cal' position.

Put the 'h/o/min' switch to the 'h' position.

Put the 'speed' selector to '1' position.

Put the 'range' switch to the 10 volt position.

Put the 'm/o' to the 'o' position.

Install recorder pen.

Turn on the Power

Use the green knob to align the pointer to zero on left side.

Switch the 'm/o'switch to the 'm' position.

Record the gauge readings on the log-sheet.

Set the Variac to 105 volts and turn it on.

Set the recorder speed to 10cm/hr and volts to 2V. This should give a recorded first spike that may be off the paper, but the melt-in/firing waveform will be large enough (peak to peak) to read easily.

When firing the filaments, switch the recorder speed from 'hr' to 'min' and then back - this saves paper.

Set the rotor switch to the filament pair to be fired.

While watching the recorder, press and hold the firing switch button. The current will surge and then drop and then slowly rise again as the aluminum melts and then begins to vaporize. As it starts to drop off linearly and gets just below the low point that was reached after the spike, release the button - this should take about 8 to 10 seconds. A timer will turn off the supply automatically after 12 seconds.

Note the filament number on the recorder paper as each filament pair is fired.

Continue until all filament pairs have been fired.

FAST FIRING OF FILAMENTS

Immediately after paired firing, prepare for fast fire. Put Variac at 68 volts and turn the Variac circuit breaker on. Throw the knife switches in prescribed pattern as below:

Time (sec.)	0	1.7	3.3	5.0	6.6	8.3	10.0	11.6	13.3	15.0	16.6	18.3	20.0
Knife on	1	1-2	1-2-3	2-3-4	3-4-5	4-5-6	5-6-7	6-7-8	7-8-9	8-9-10	9-10	10	0
Knife off				1	2	3	4	5	6	7	8	9	10

Thus each knife is closed for 5 seconds, the time deemed correct to prevent filament being heated while bare of aluminum (1987).

This value was determined by activating the circuit - knife # 1 and watching through the window port for telltale visual evaporative process. This time may vary slightly according to filament age, aluminum contact initially etc. However in failure of 1987 aluminizing, the timing was grossly off. The filament was on for 9 seconds, for 4 of those seconds the filaments were bare of aluminum. - Earl Emery

SHUTDOWN

Close North and South gate valves DPV1 & DPV2 to the manifold.

Turn off the North & South D.P.s as well as the Booster D.P.s.

Turn off the Intermediate and Safety bypass D.P.s.

Note - do not close the main roughing pump valve RV1 until the intermediate and the emergency bypass D.P.s have cooled. The blower and roughing pumps must back these D.P.s. until they cool.

<u>When all Intermediate and the Safety Bypass D.P.s have cooled:</u>

Close main roughing valve, RV1.

Turn off the blower pump.

Turn off all ion gauges.

Introduce oxygen to the tank through the Kerotest valve at about 3-5 p.s.i. Use one bottle.

After oxygen, introduce air to the tank through the filter port.

Turn off water flow to D.P.s and roughing pumps.

Disconnect gauges to tank.

Disconnect water hoses to tank.

<u>When temperatures of North, South and the Booster D.P.s reach ambient temperature.</u>

Close valves IN THIS ORDER, BV1,BV2,FV1, RV2, RV3 and RV4.

Turn off the roughing pumps.

Turn off all TC gauges.

Turn off refrigerant condensors.

After 30 minutes, turn off water flow to roughing pumps.

Pump-down log sheet

ROUGHING (TC) GAGE READINGS

TANK					PUMPS		
Time	Manifold	Inter-mediate	High farside	Roughing	Stokes	Kinney	Leybold
START							
00:30							
01:00							
01:30							
02:00							
02:30							
03:00							
03:30							
04:00							
04:30							
05:00							
06:00							
06:30							
07:00							
07:30							
08:00							

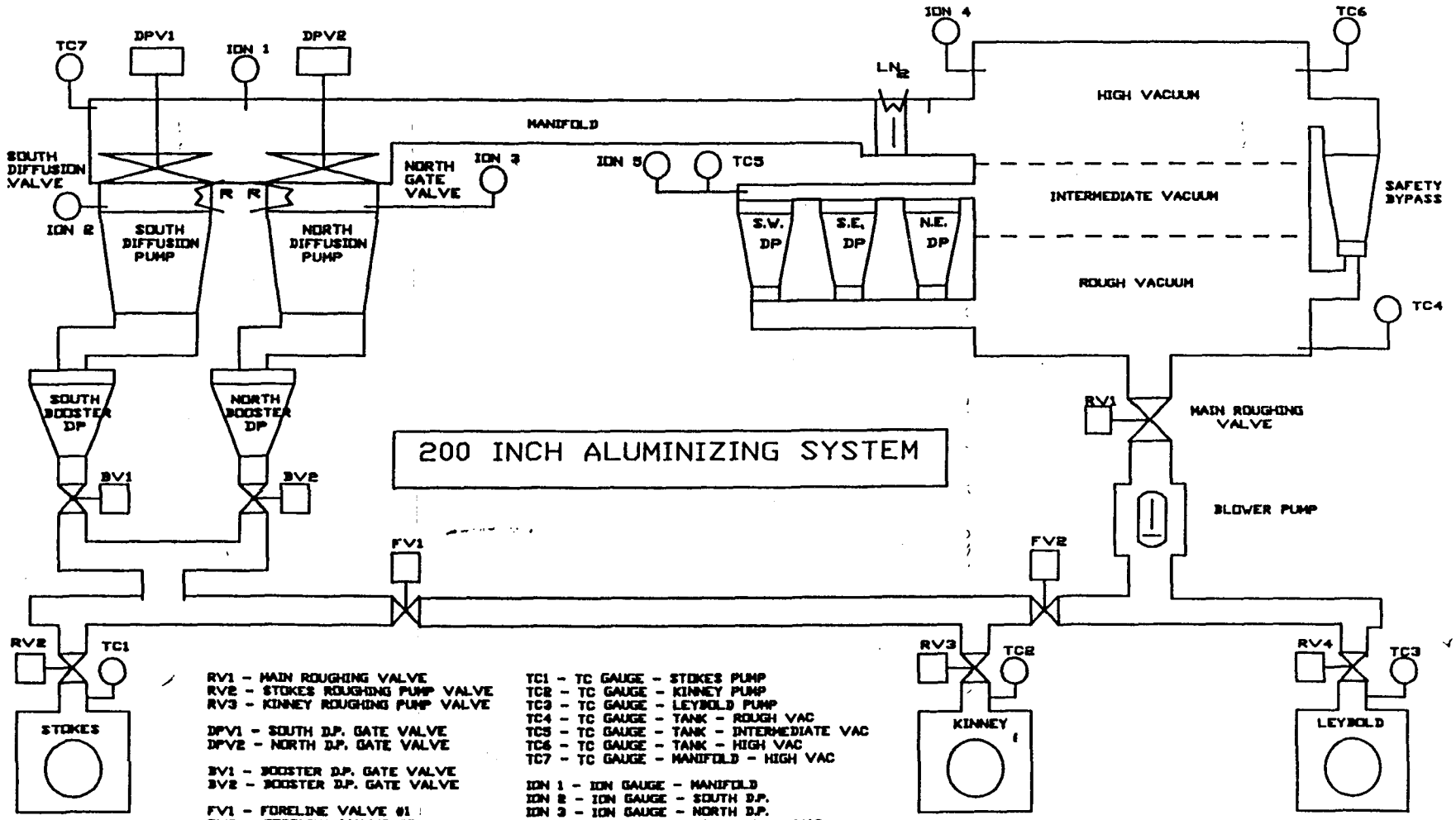
200 INCH ALUMINIZING SYSTEM
TC7
DPV1
ION 1
DPV2
ION 4
TC6
LN2
HIGH VACUUM
MANIFOLD
SOUTH DIFFUSION VALVE
NORTH GATE VALVE
ION 3
ION 5
TC5
INTERMEDIATE VACUUM
SAFETY BYPASS
ION 2
SOUTH DIFFUSION PUMP
NORTH DIFFUSION PUMP
S.W. DP
S.E. DP
N.E. DP
ROUGH VACUUM
TC4
SOUTH BOOSTER DP
NORTH BOOSTER DP
RV1
MAIN ROUGHING VALVE
BV1
BV2
BLOWER PUMP
FV1
FV2
RV2
TC1
RV3
TC2
RV4
TC3
STOKES
KINNEY
LEYBOLD
RV1 - MAIN ROUGHING VALVE
RV2 - STOKES ROUGHING PUMP VALVE
RV3 - KINNEY ROUGHING PUMP VALVE
DPV1 - SOUTH D.P. GATE VALVE
DPV2 - NORTH D.P. GATE VALVE
BV1 - BOOSTER D.P. GATE VALVE
BV2 - BOOSTER D.P. GATE VALVE
FV1 - FORELINE VALVE #1
FV2 - FORELINE VALVE #2
TC1 - TC GAUGE - STOKES PUMP
TC2 - TC GAUGE - KINNEY PUMP
TC3 - TC GAUGE - LEYBOLD PUMP
TC4 - TC GAUGE - TANK - ROUGH VAC
TC5 - TC GAUGE - TANK - INTERMEDIATE VAC
TC6 - TC GAUGE - TANK - HIGH VAC
TC7 - TC GAUGE - MANIFOLD - HIGH VAC
ION 1 - ION GAUGE - MANIFOLD
ION 2 - ION GAUGE - SOUTH D.P.
ION 3 - ION GAUGE - NORTH D.P.
ION 4 - ION GAUGE - TANK - HIGH VAC
ION 5 - ION GAUGE - TANK - INTER. VAC

Roque de Los Muchachos

Presentation by B. Mack

Summary Presentation: The Current Plans for Future Observatories

Contents:

Columbus Project

Presentation by B. Atwood

The Columbus Report

ESO Workshop:

Cleaning and Coating Large Mirrors

Eso Headquarters, Garching

7 and 8 October 1991

Bruce Atwood and Barry A. Sabol

I
Columbus Aluminization Configuration

II
Aluminization Experiments-The Columbus List

III
Aluminization Experiments at Ohio State

1. Our equipment
   - Diffusion Pump system
   - Thickness monitor
   - RGA
   - Power supply and transformers
   - Monochromator with
     - absolute reflectance accessory
2. Gas evolution during aluminization
3. Effect of background gasses on reflectivity
4. Pumping schemes
5. Filament geometry and source function
6. Power supply strategies

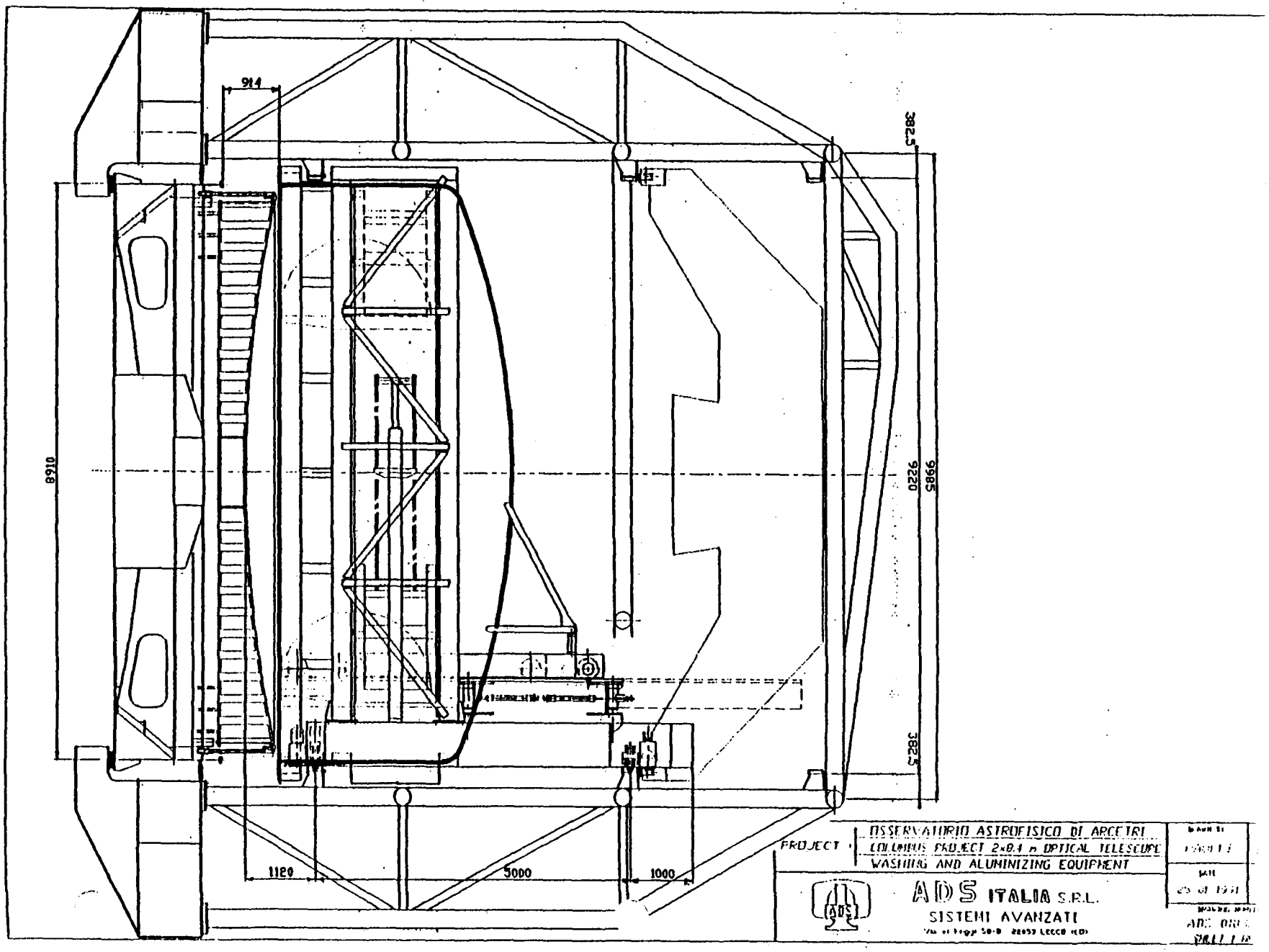
914
8910
3825
9226
9998
3825
1120
5000
1000
PROJECT
OSSERVATORIO ASTROFISICO DI ARCETRI
COLUMBUS PROJECT 2×8.4 m OPTICAL TELESCOPE
WASHING AND ALUMINIZING EQUIPMENT
ADS ITALIA S.R.L.
SISTEMI AVANZATI

ALUMINIZING EXPERIMENTAL AND DESIGN ACTIVITIES
(version 25 March 1991)

Improved Optimization of Filament Locations

- w/o baffles
- w/baffles
- w/ baffles and plasma
- increase to 5 rings
- optimize in single filament plane

Model Aluminum Distributions vs. Reality

- comparison of model to chamber thickness measurements
- thickness measurements by transmission

Verify the Properties of "higher density" and "astronomy standard" aluminum coatings

[samples from Las Campanas]
[samples from Italy]
[samples from Sunnyside]
[samples from MMT small chamber]

- higher reflectivity
- lower emissivity
- washability (snowability)

Study Aluminizing in Argon

- reflectivity vs argon pressure
- reflectivity vs oxygen pressure
- profile variations from scattering
- ionization of the argon?

Study Plasma-Assisted Aluminizing

- reflectivity and adherence measurements
- ion assisted aluminum properties
- antenna design
- special chamber requirements

Chemistry and Logistics of Coating Removal

- quantify the aluminum removal recipe from silica
- quantify the silver, gold, chrome removal recipes
- conduct experiments with potassium ferrocyanide
- conduct experiments with Printed Circuit Board etchant
- quantify the effects of the silica recipes on E6
  - long term damage tests
  - aluminum removal rates
- consider alternate removal schemes
- integrate coating removal into cell design
- design edge seal in detail (polish the edge)
- design scheme to apply chemicals to the mirror
- design scheme to clean the mirror

Impact of Mirror Support and Ventilation on Coating

- measure leak rates of mirror supports
- measure leak rates of ventilation units
- measure leak rates of the honeycomb structure
- quantify the contaminants
- estimate the tolerable leak rates in dirty vacuum
- measure leak rates of butyl rubber seals
- estimate the tolerable leak rates in clean vacuum

Filament Power Considerations

- measure filament transformer properties
- price high current feedthroughs
- design and build filament power supplies
- estimate standard filament power and load
- measure leak rates of transformers

Pumping Designs

- estimate required pumping speed
- quantify getter pumping scheme
- cryopanel design and test
- experiment with hydrogen gas effects
- compare commercial cryopumps to cryopanels

Chamber Design

- specify number and location of ports
- specify flange configuration
- chamber testing requirements
- interior coating (epoxy, Al, stainless, Ni ?)

Bell Jar Preparation and Handling

- design fixtures for filaments and pumps
- develop loading procedure
- study integration of cleaning and coating procedure

ALUMINIZING EXPERIMENTAL AND DESIGN ACTIVITIES
(version 25 March 1991)

Improved Optimization of Filament Locations

Model Aluminum Distributions vs. Reality

Verify the Properties of "higher density" and "astronomy standard" aluminum coatings

Study Aluminizing in Argon

Study Plasma-Assisted Aluminizing

Chemistry and Logistics of Coating Removal

Impact of Mirror Support and Ventilation on Coating

Filament Power Considerations

Pumping Designs

Chamber Design

Bell Jar Preparation and Handling

BASELINE LIST OF ALUMINIZING SYSTEM FEATURES

250 -- 300 filaments, 400 -- 600 Watts each

4 -- 5 rings of filaments

Filaments in a single plane

1.0 -- 1.5 meters above the mirror

Filament shutters and baffles

Dedicated low voltage wiring to each filament

Strip mirror horizon pointing

Install chamber horizon pointing

Clean mirror horizon pointing

Aluminize horizon pointing

Chamber divided into clean / dirty sections

Blowout valve between sections

Roughing Pumps: Roots blowers backed by rotary pumps

HiVac Pumps: Cryopumps or Cryopanels

Residual Gas Analyzer

Quartz Crystal Thickness Monitors (~ 8)

Pressure Gauges

Bleed Valves

Edge Seals for ventilation, washing, aluminizing

Dual O-ring flange seal in keystone groove

3 -- 4 one meter vacuum ports on the top hat

Dummy mirror cell baseplate with 1.0 meter opening

Thermocouple readout system (shared with telescope?)

078

Ohio State/Columbus Project

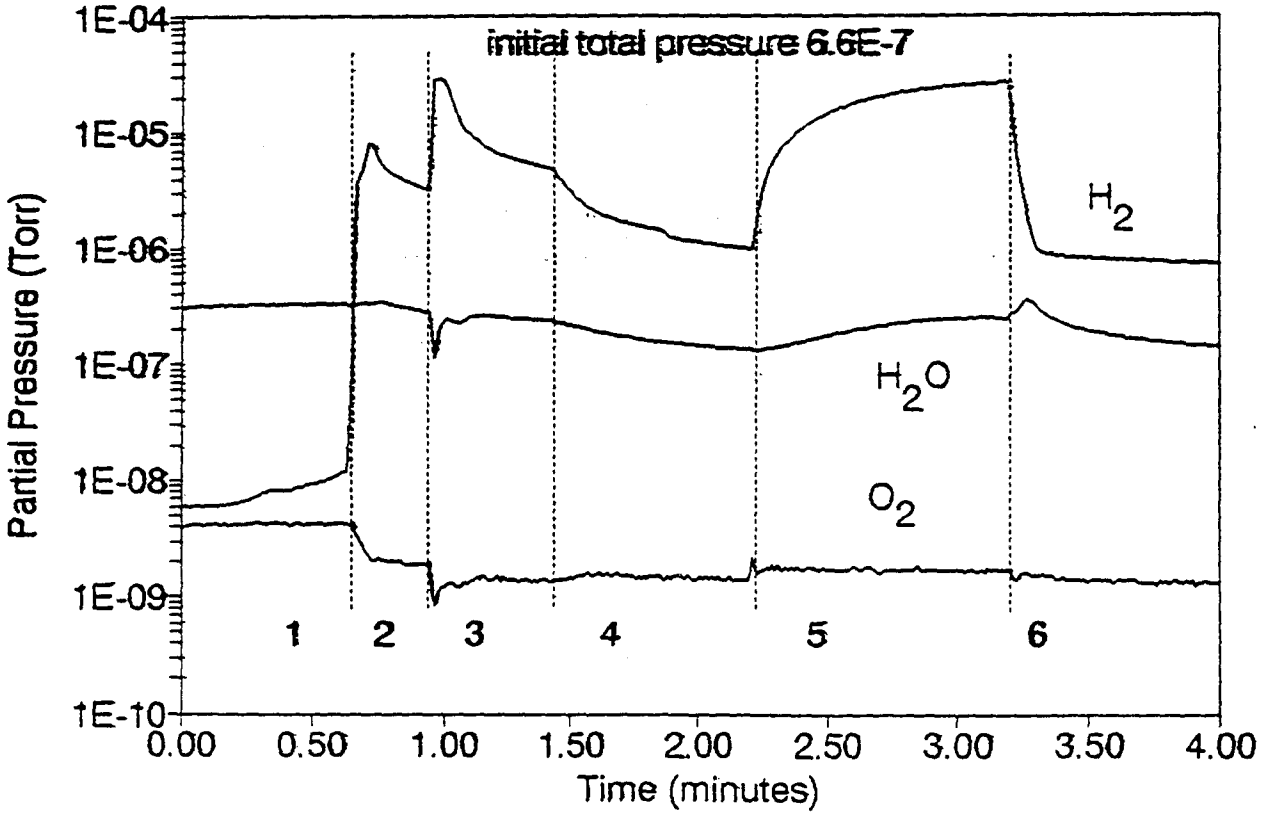

Ohio State/Columbus Project

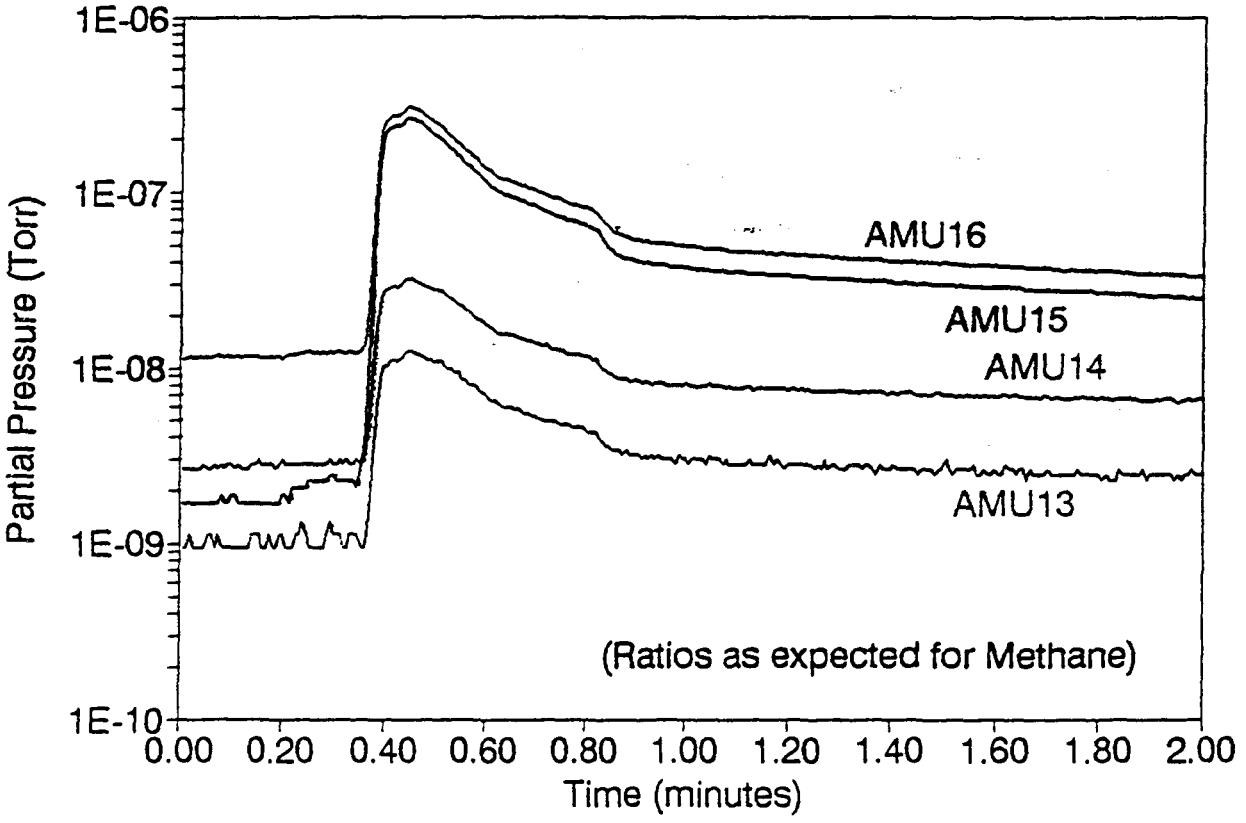

Ohio State/Columbus Project

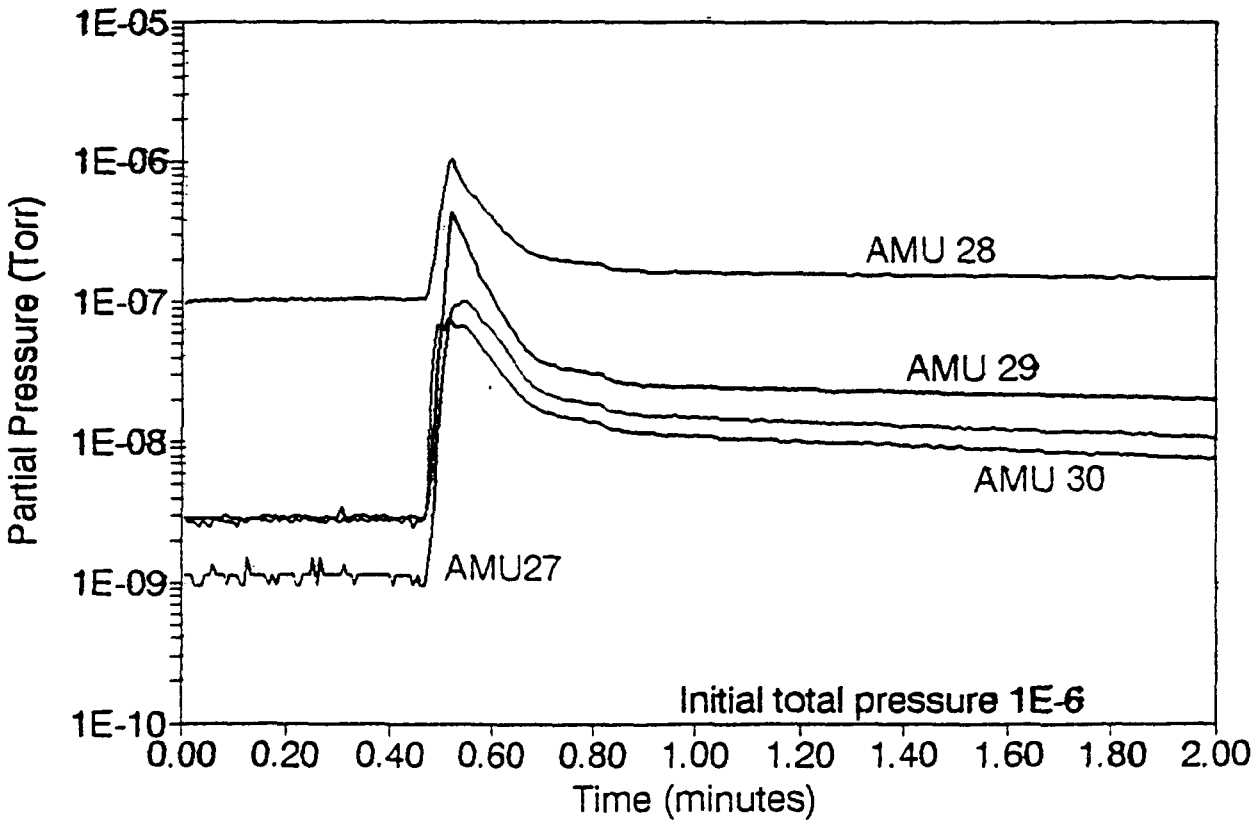

012

Ohio State/Columbus Project

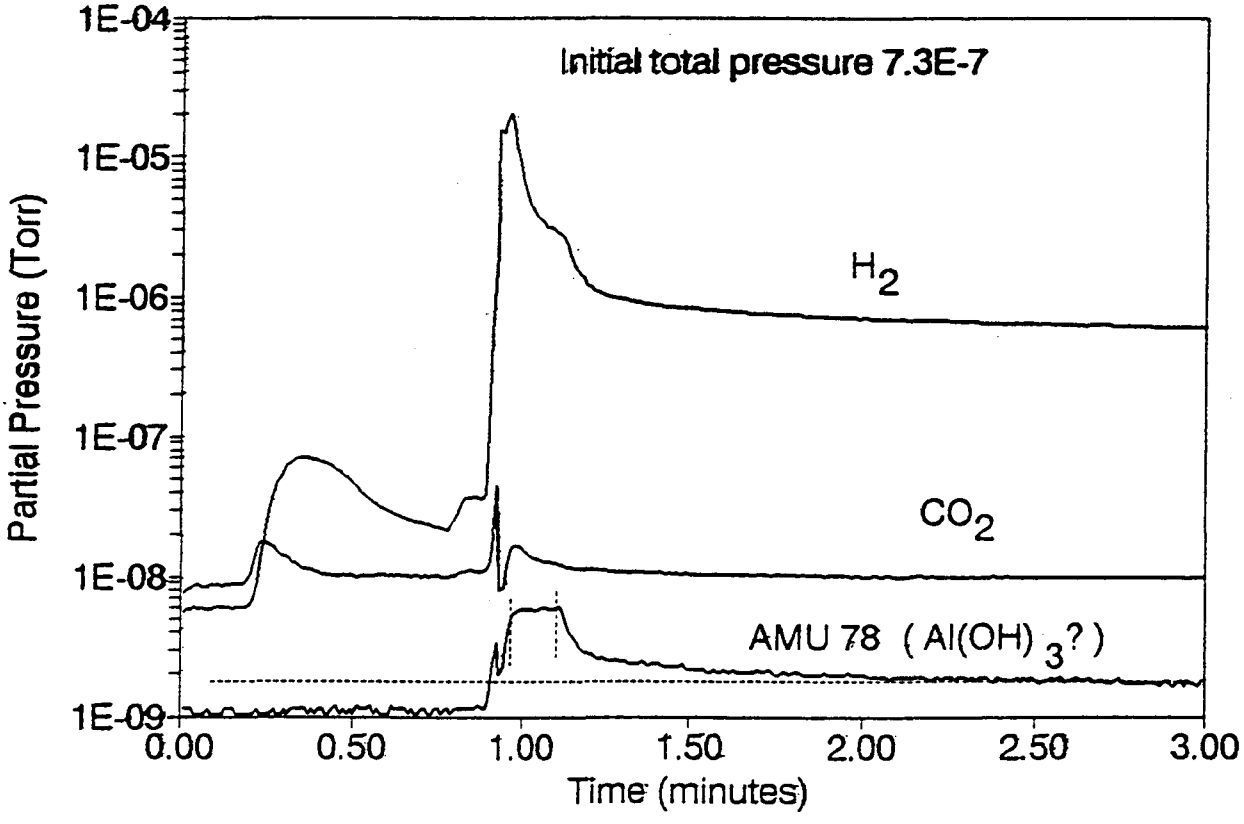

Ohio State/Columbus Project

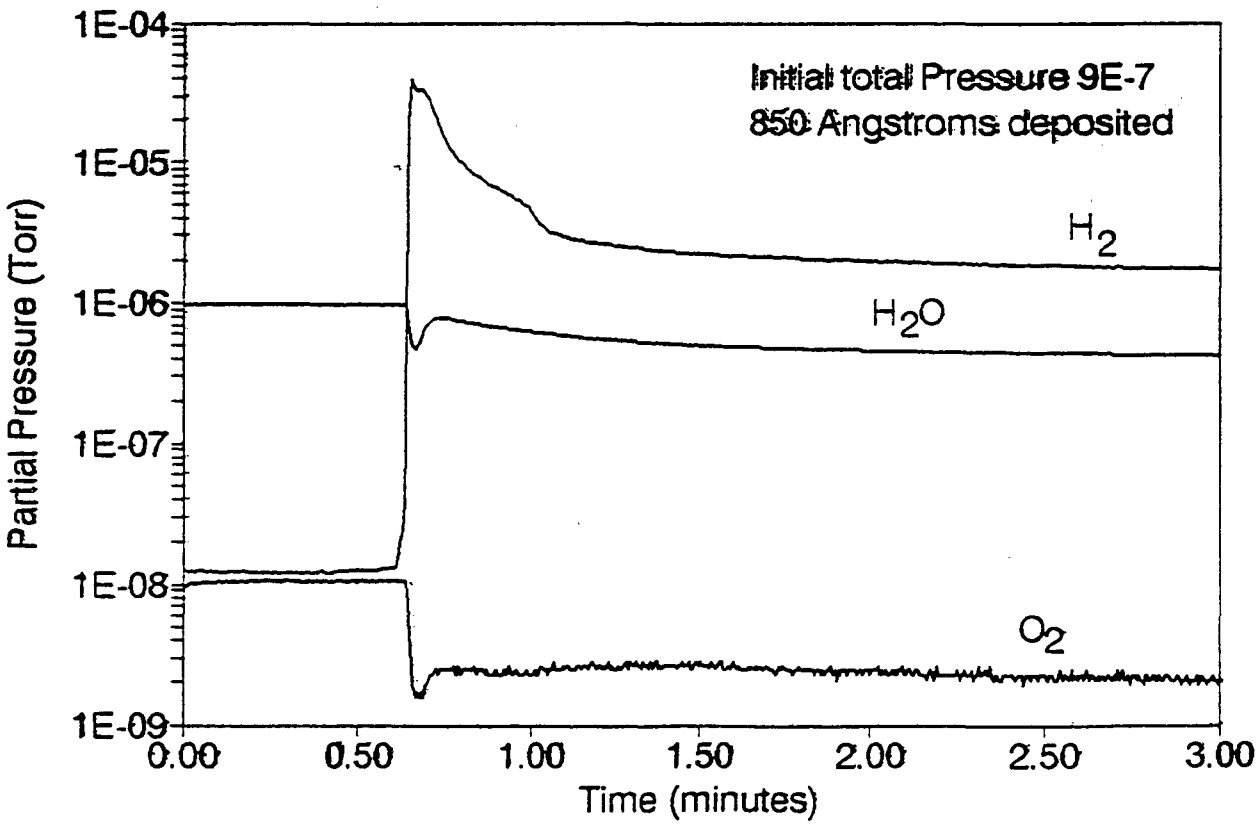

087

Ohio State/Columbus Project

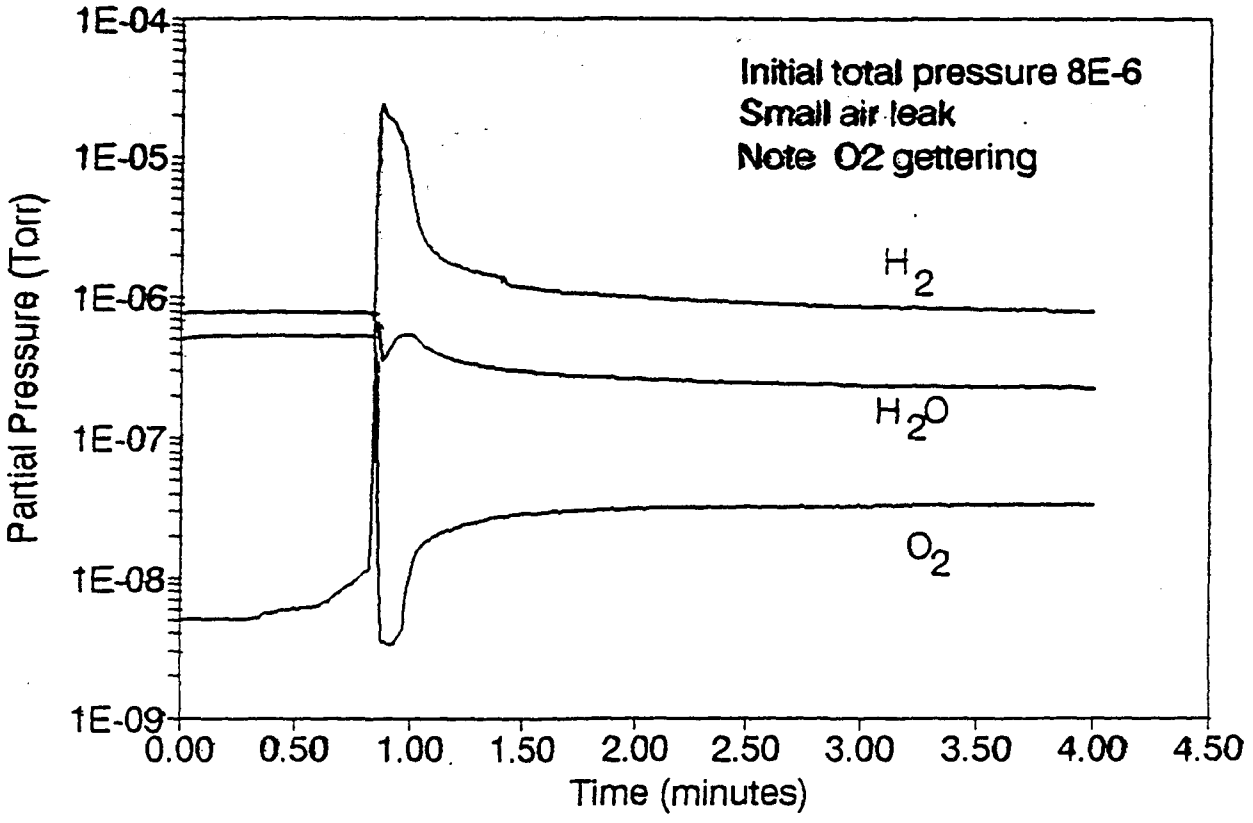

Ohio State/Columbus Project

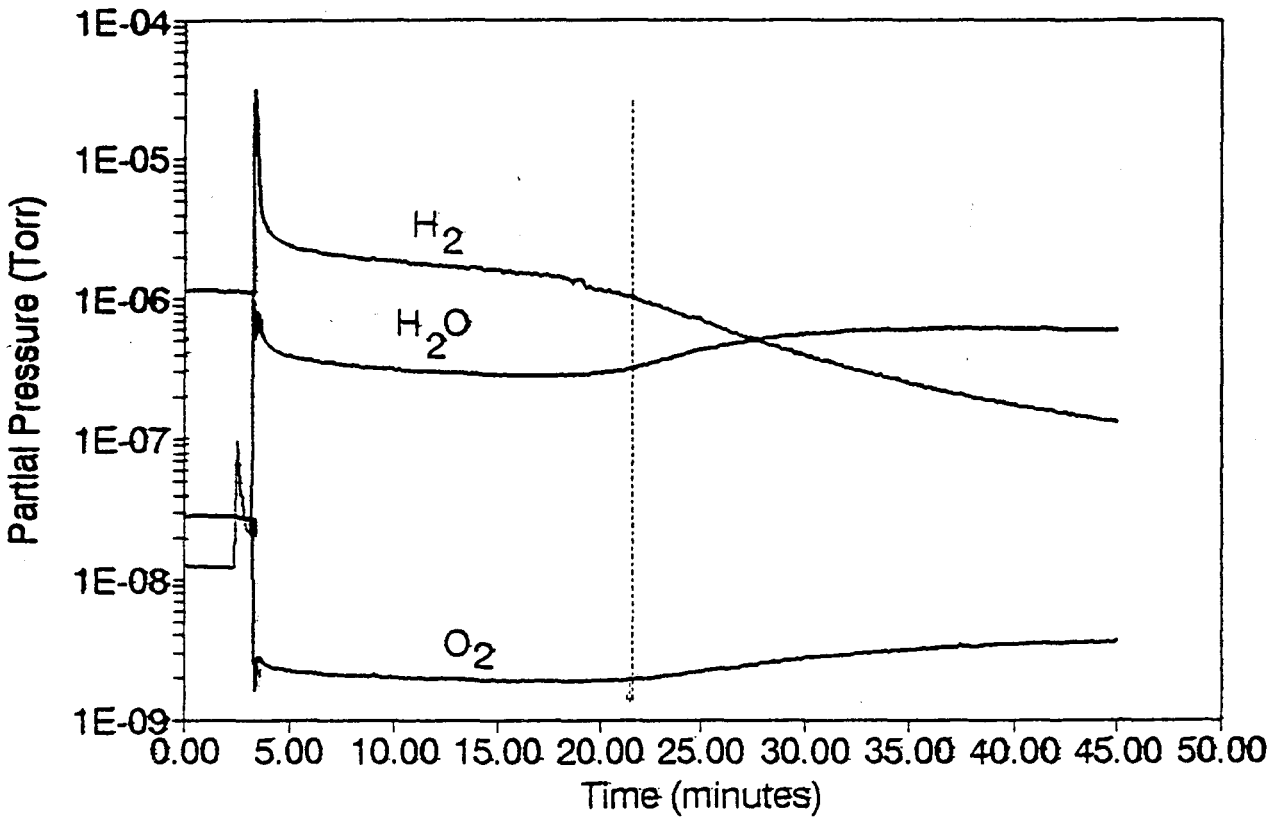

106alpt

Ohio State/Columbus Project

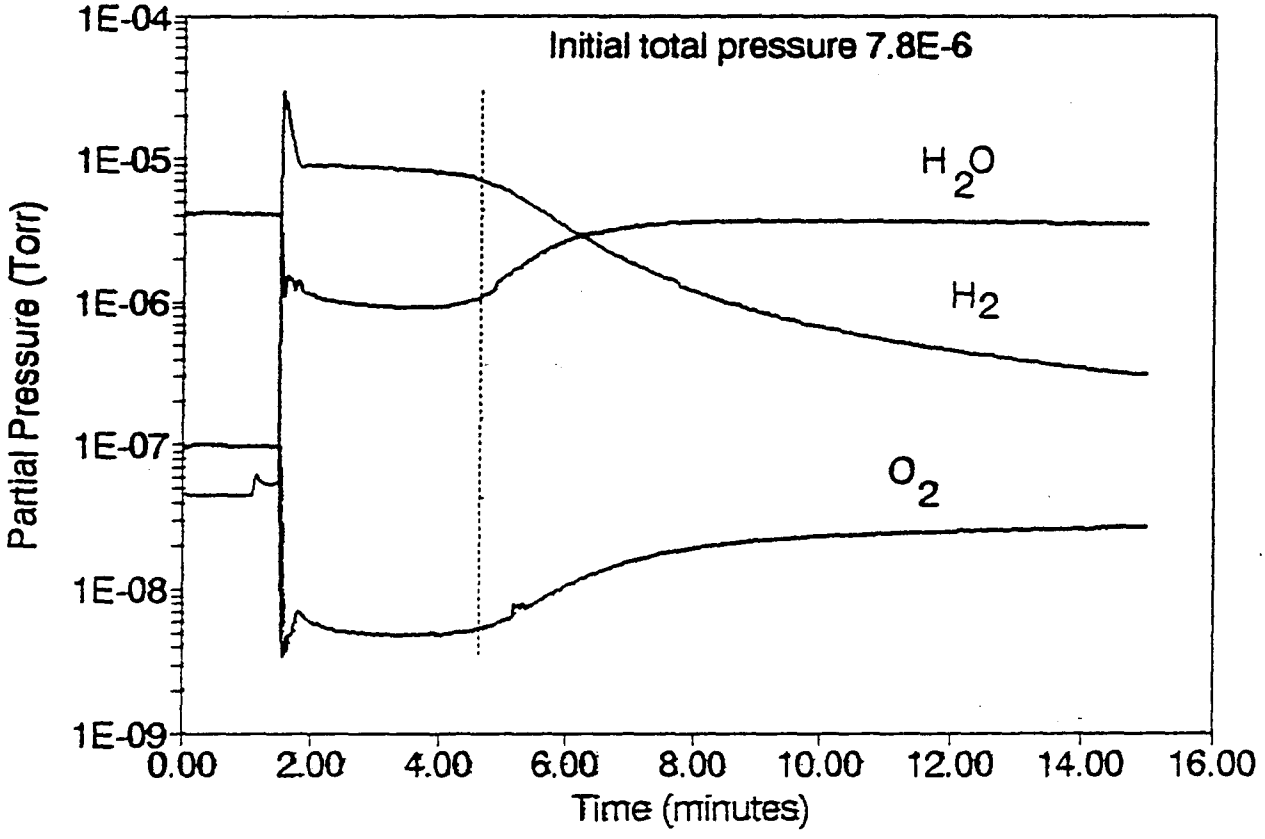

065

~~063~~alpt

Ohio State/Columbus Project

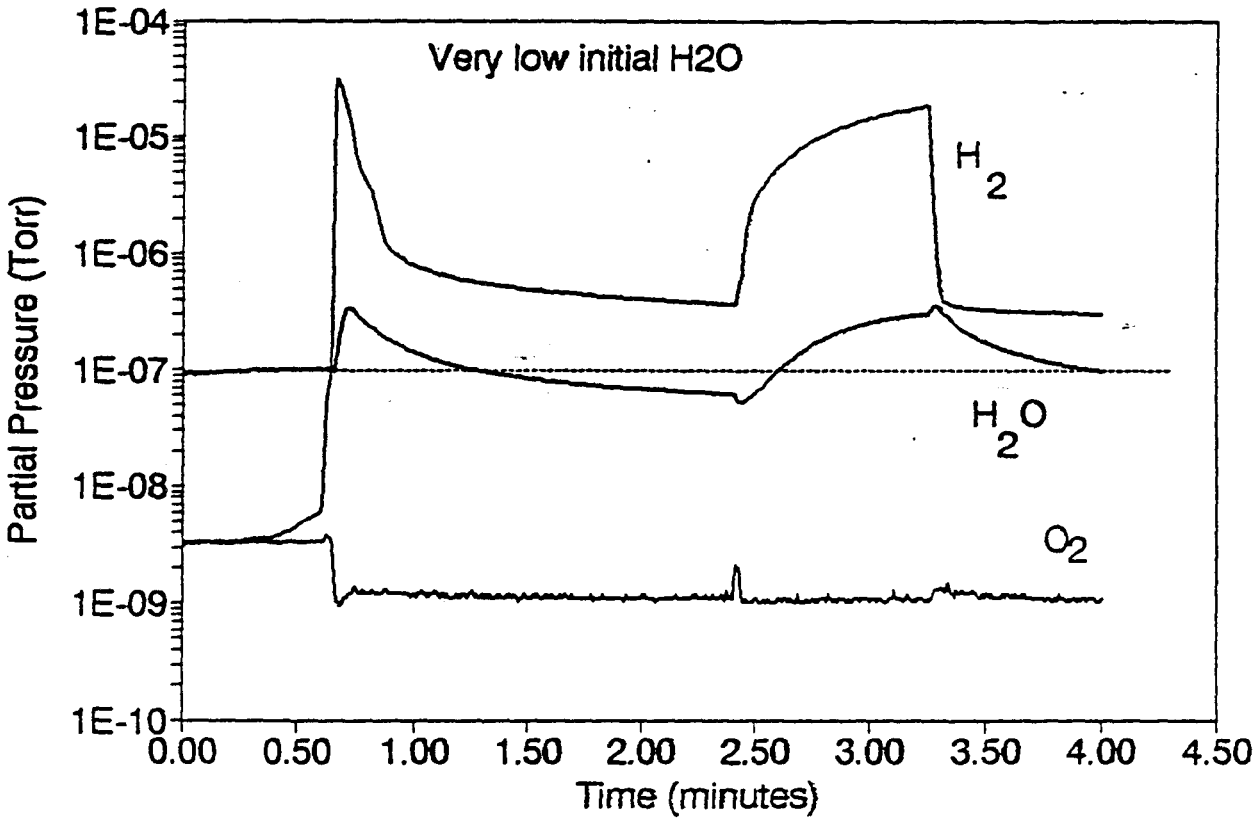

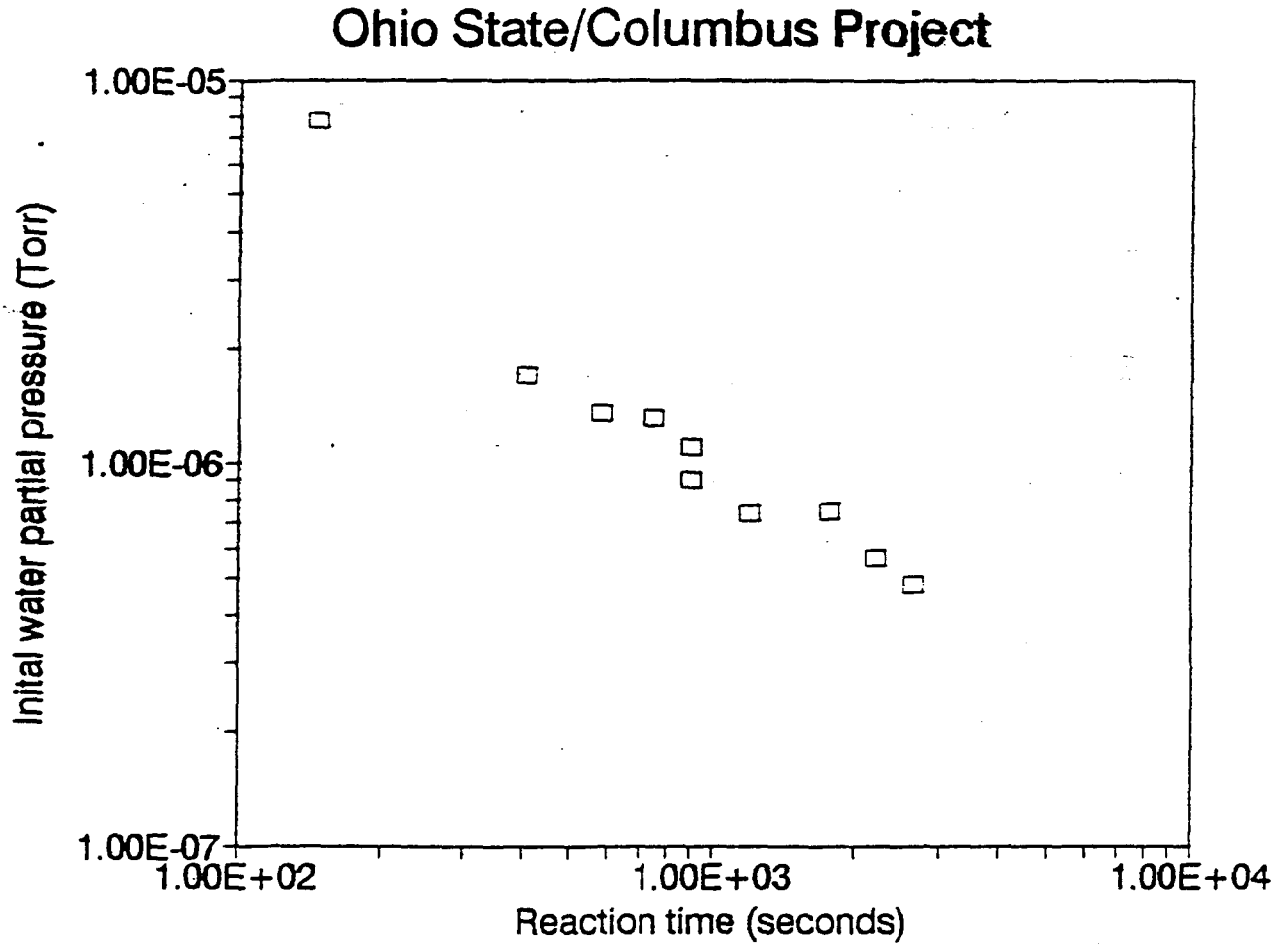
Ohio State/Columbus Project
1.00E-05
1.00E-06
1.00E-07
Inital water partial pressure (Torr)
1.00E+02
1.00E+03
1.00E+04
Reaction time (seconds)

I
Columbus Aluminization Configuration

II
Aluminization Experiments-The Columbus List

III
Aluminization Experiments at Ohio State

1. Our equipment
   - Diffusion Pump system
   - Thickness monitor
   - RGA
   - Power supply and transformers
   - Monochromator with
     - absolute reflectance accessory
2. Gas evolution during aluminization
3. Effect of background gasses on reflectivity
4. Pumping schemes
5. Filament geometry and source function
6. Power supply strategies

Coating Thickness Distribution

Helical Filament

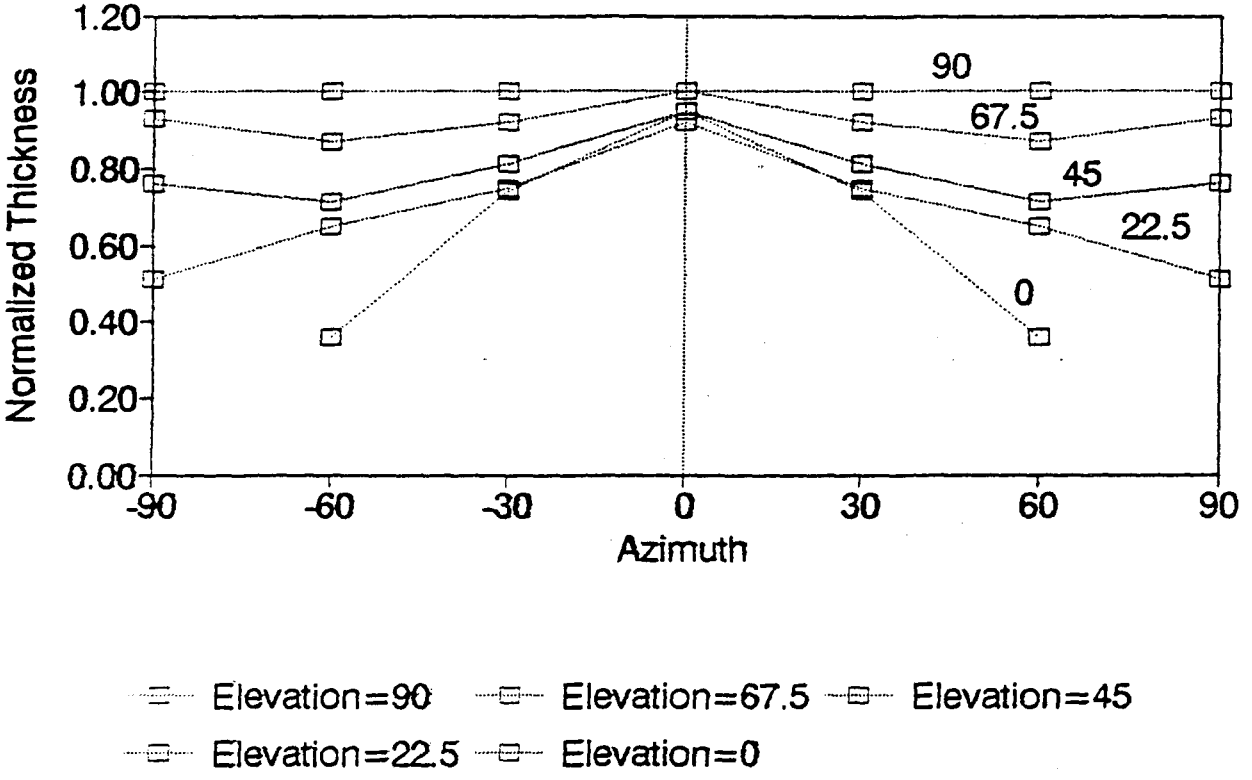

This is the only copy that is any good - and it was the ~~[illegible]~~ image vertically above the filament. The horizontal image was similar with most emission coming from the back of the inside of the filament.

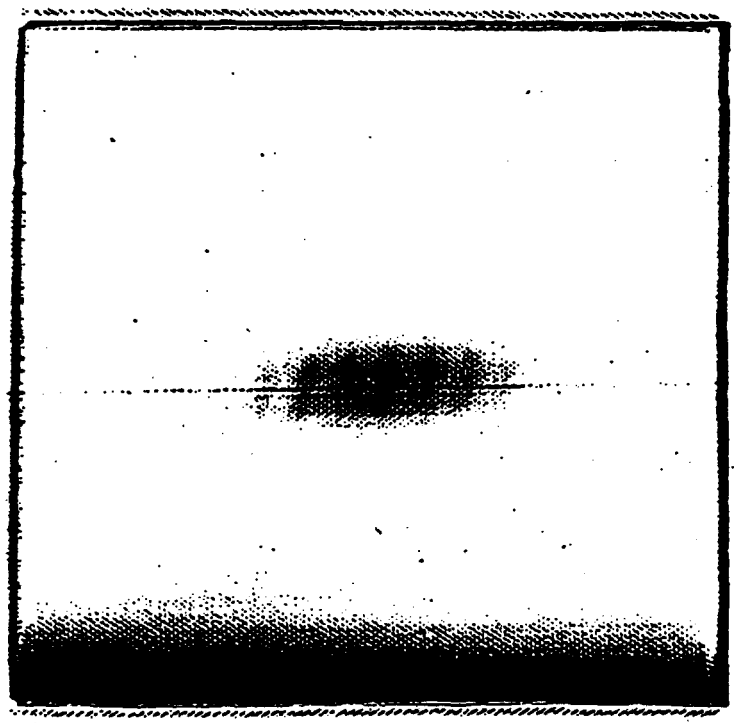

↓

Chamber Rear.

5/3/91 pinhole .047" dia (#56 drill)
pinhole 4" from source - plate 4" from pinhole

pitch of helix (reversed image) shows that most the emission comes from the bottom of the coil

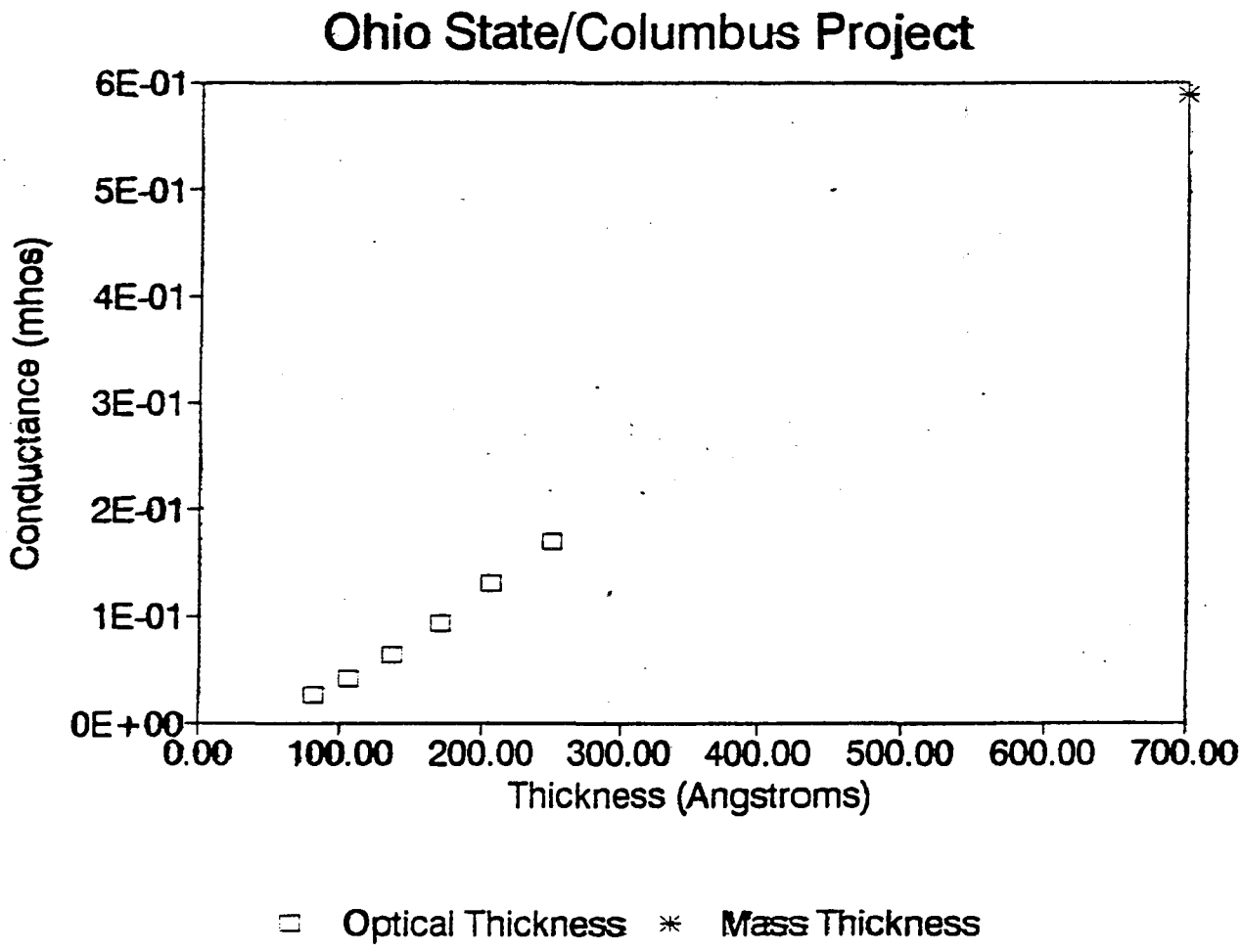
Ohio State/Columbus Project
6E-01
5E-01
4E-01
3E-01
2E-01
1E-01
0E+00
Conductance (mhos)
0.00
100.00
200.00
300.00
400.00
500.00
600.00
700.00
Thickness (Angstroms)
Optical Thickness
Mass Thickness

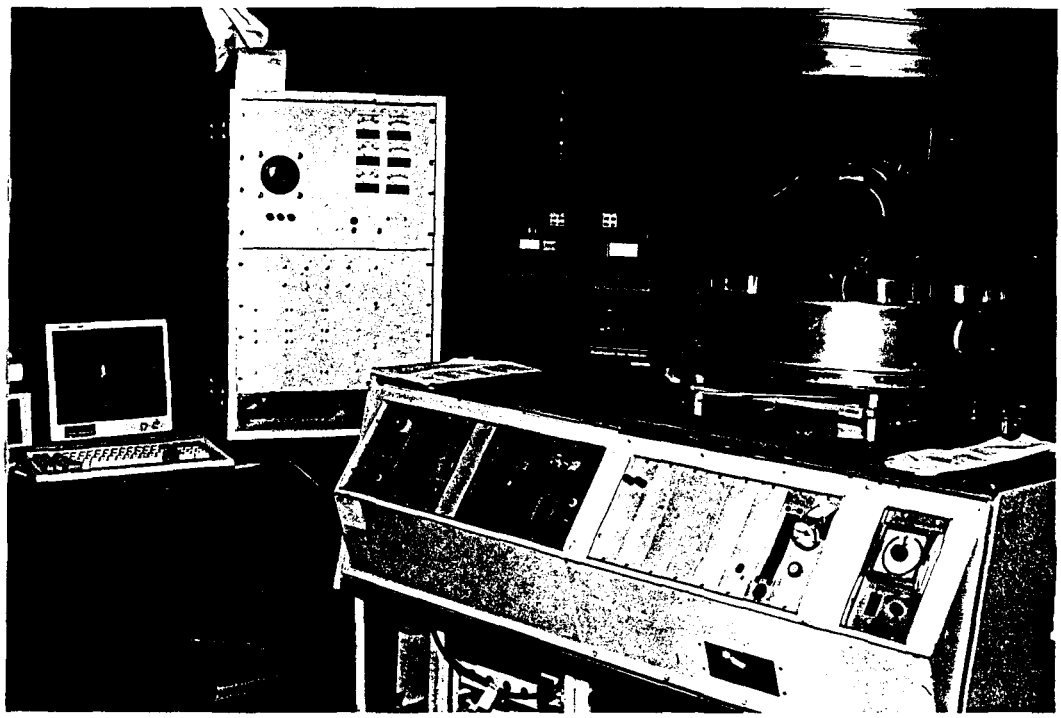

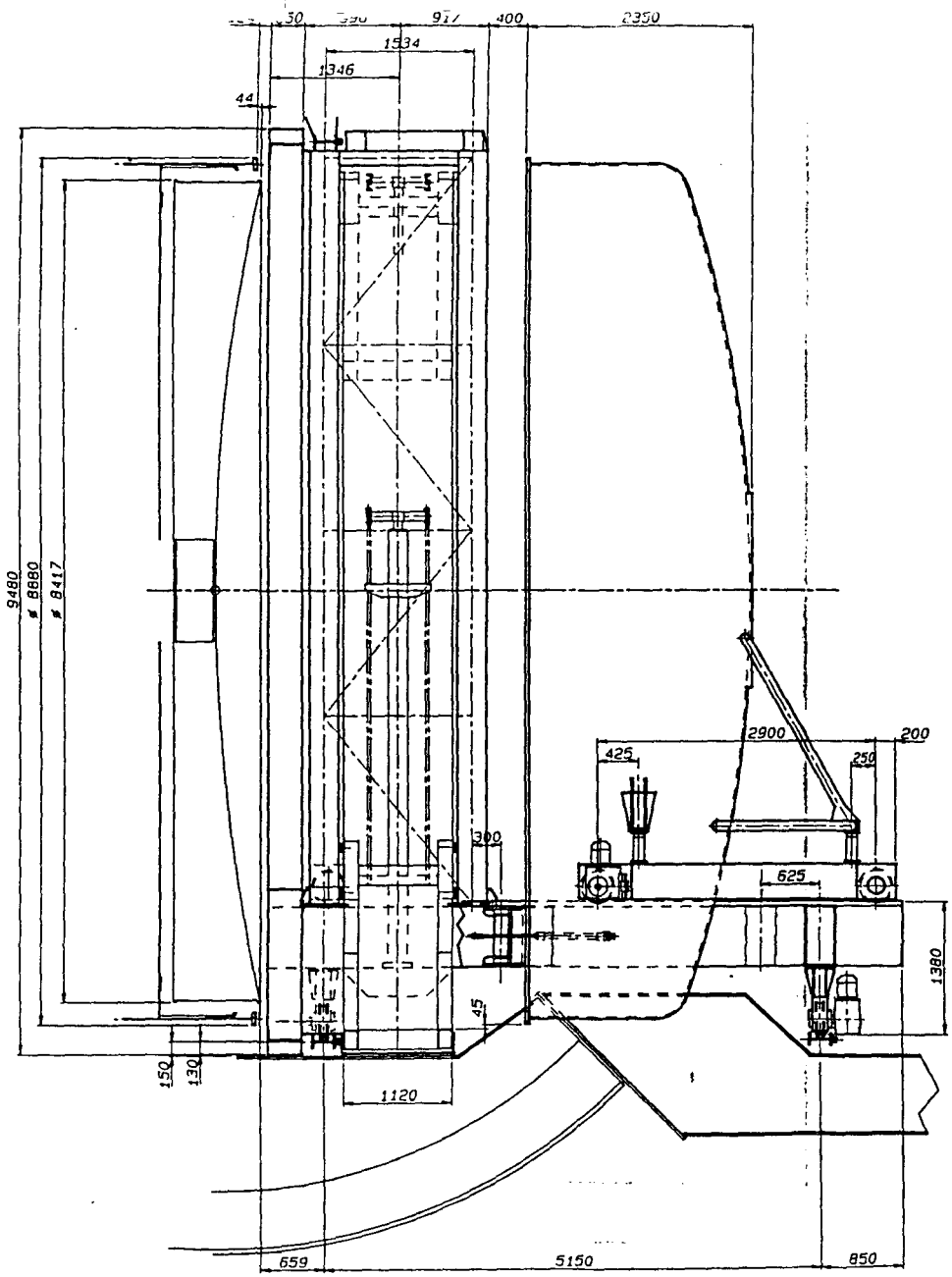

SECTION E

PROJECT :	OSSERVATORIO ASTROFISICO DI ARCETRI COLUMBUS PROJECT 2x8.4 m OPTICAL TELESCOPE WASHING AND ALUMINIZING EQUIPMENT	DRAWN BY PAULLI	SCALE 1:50
	ADS ITALIA S.R.L. SISTEMI AVANZATI Via ai Poggi 58/B 22053 LECCO (CO)	DATE 05-06-1991	
		DRAWING NUMBER ADS 010333	

V2

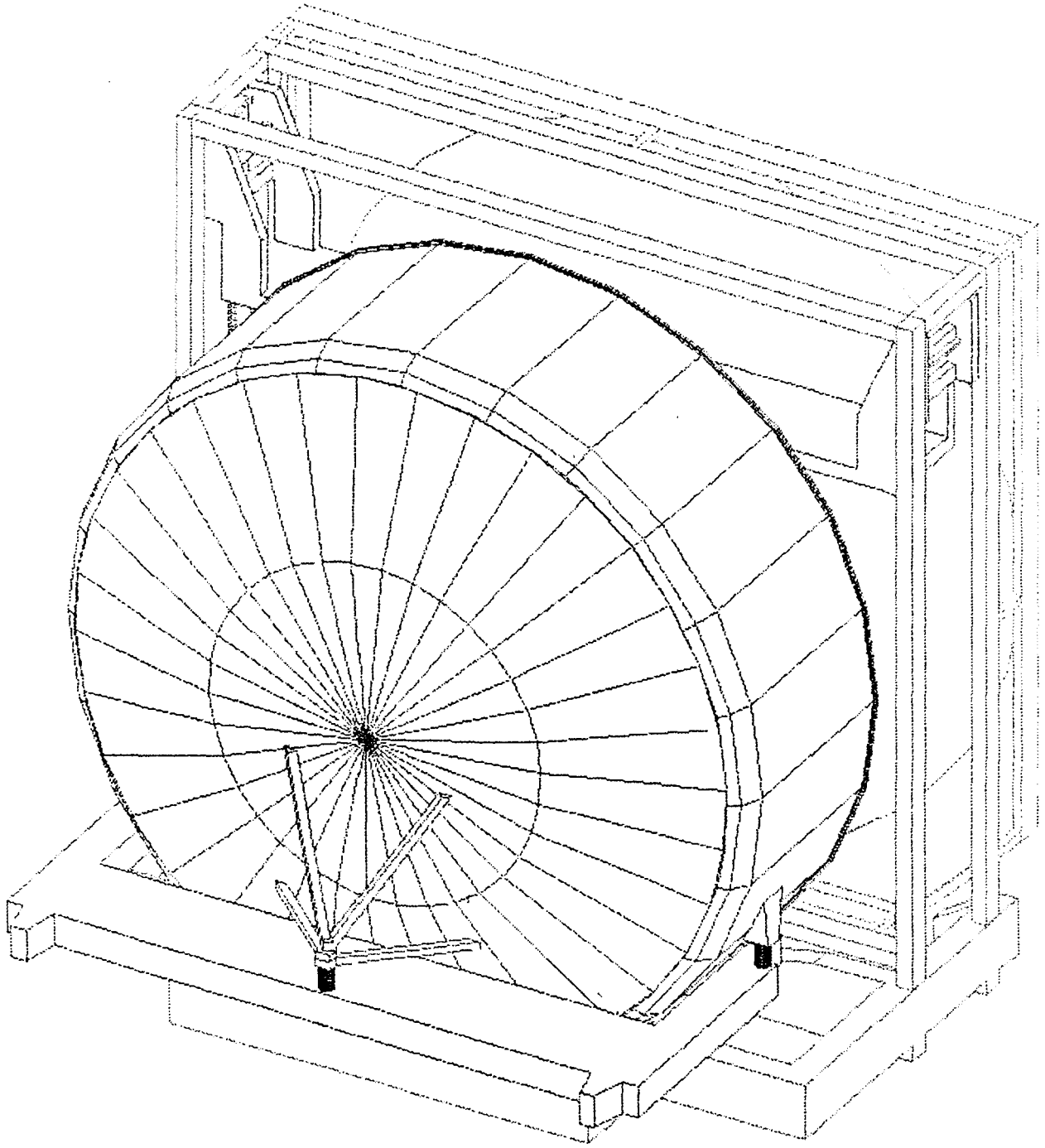

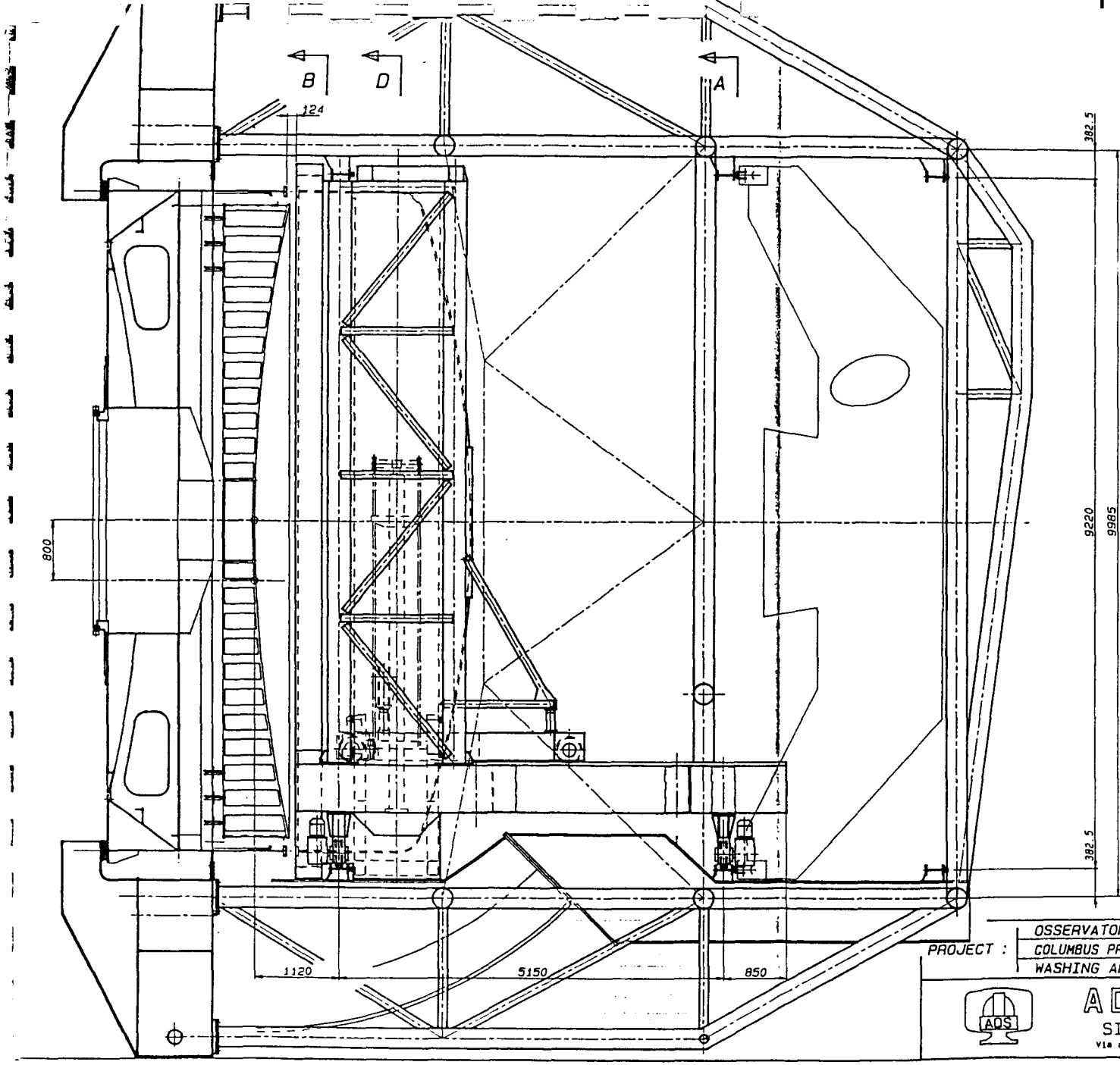

PROJECT : OSSERVATORIO ASTROFISICO DI ARCETRI
COLUMBUS PROJECT 2x8.4 m OPTICAL TELESCOPE
WASHING AND ALUMINIZING EQUIPMENT

ADS ITALIA S.R.L.
SISTEMI AVANZATI
Via ai Poggi 58/B 22053 LECCO (CO)

DRAWN BY	SCALE
PAULLI	1: 50
DATE	
05-06-1991	
DRAWING NUMBER	
ADS 010333	
SHEET 1 OF 7	

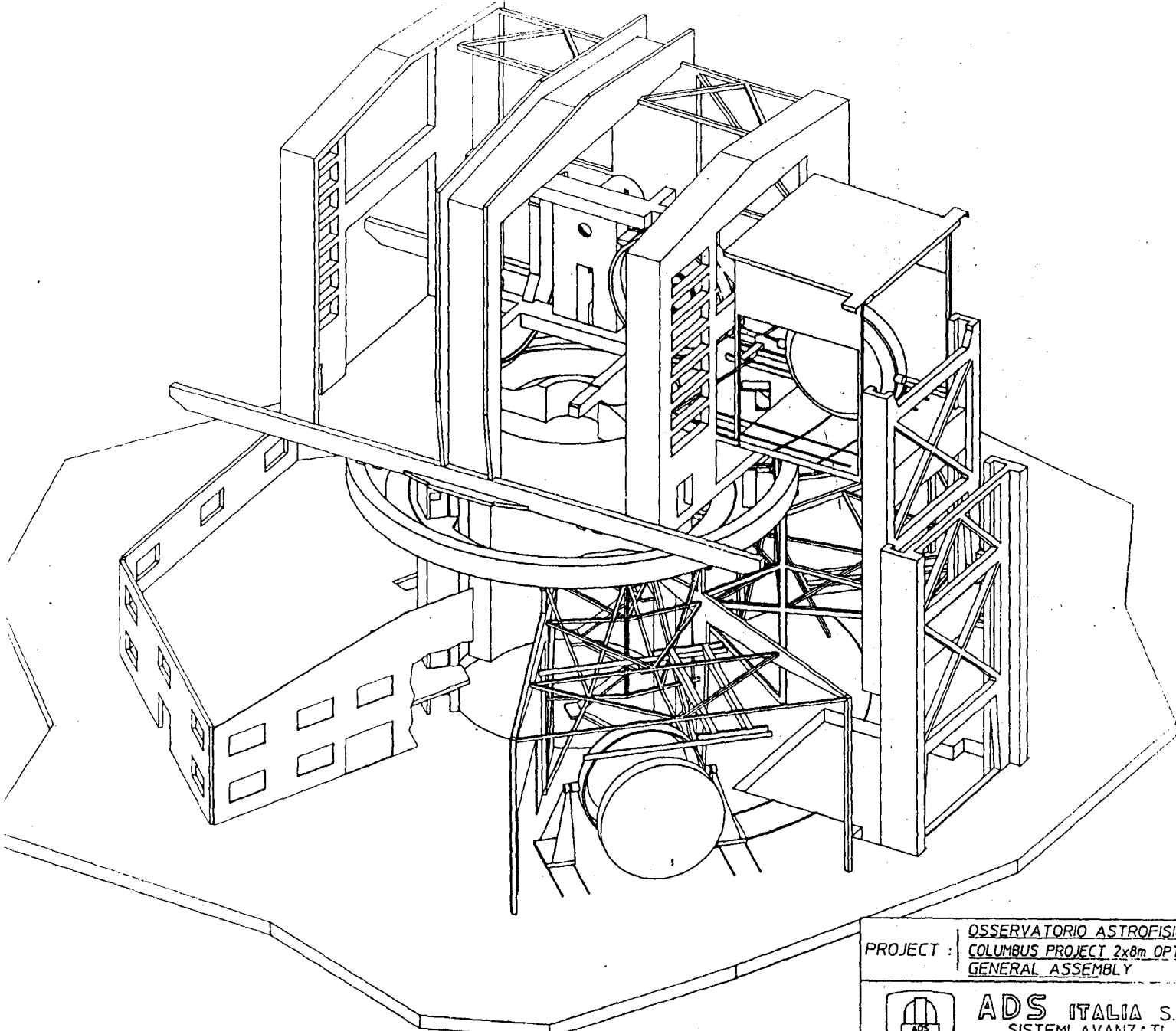

PROJECT :	OSSERVATORIO ASTROFISICO DI ARCETRI COLUMBUS PROJECT 2x8m OPTICAL TELESCOPE GENERAL ASSEMBLY	DRAWN BY PAULLI	SCALE 1:250
		DATE 17-05-1990	
	ADS ITALIA S.R.L. SISTEMI AVANZATI Via al nocol 56/B 22053 LECCO (CO)	DRAWING NUMBER 300625	
		SHEET OF	

Gemini Project

Presentation by K. Raybould

SCIENCE RECOMMENDATIONS

1. Start an agressive program to demonstate the feasibility of producing durable low emissivity coatings.

2. Investigate methods for cleaning the primary mirror in-situ.

SCIENCE REQUIREMENTS

1. SCIENCE REVIEW MEETING IN US 18/ 19 JULY 1991

Concluded that one of the highest priority for the Gemini project is the capability to deposit low emissivity durable coatings.

Telescope emissivity specification 4% (excluding scattering and sky contribution).

Telescope emissivity can degrade to 5% before the mirror emissivity must be reduced to the post coating level.

Target emissivity of 2%.

GEMINI COATING PLANT PROGRAM

SCIENCE REQUIREMENTS

GEMINI DEVELOPMENT PLAN FOR LOW EMISSIVITY COATING

IN-SITU MIRROR CLEANING

PROGRAM FOR DESIGN, PROCUREMENT, INSTALLATION AND COMMISSIONING

TELESCOPE EMISSIVITY BUDGET

Primary mirror (silver coated)	0.5%
Secondary mirror (silver coated)	0.5%
0.5mm bevel around secondary mirror	0.22%
Secondary mirror support vanes (12mm)	0.4%
Primary mirror bore (hole in centre)	0.0%
Diffraction at edge of secondary (10 microns)	0.2%
Scattering off mirror surfaces (APART)	?
Other sources	?

LOW EMISSIVITY DURABLE COATING DEVELOPMENT PROGRAM

AIMS

1. Literature search on potential coating techniques. Silver is the prefered film for its low emissivity in the IR.

2. Small scale testing of a few promising techniques. Durability of coating to be tested with accelerated environmental testing.

3. Coat 1.3m IR telescope optics.

4. If 1-3 are successful, investigate methods of boosting the relectance in the blue and UV end of the spectrum.

5. Develop methods for cleaning the primary mirror in-situ.

PROGRAM FOR DESIGN, PROCUREMENT INSTALLATION AND COMMISSIONING

1. Develop sputtering process hardware design for testing in the 4.2m chamber.
2. Design and specification
3. Procurement
4. Test assembly at manufacturers
5. Ship
6. Assemble on site
7. Commission
8. Coat primary mirror

STI OPTRONICS

UV LASER CLEANING OF ASTRONOMICAL TELESCOPE MIRRORS

Contact: Dr. Wayne Kimura
STI Optronics
2755 Northup Way
Bellevue, WA 98004, USA
Phone: (206) 827-0460
FAX: (206) 828-3517

CURRENT STATUS

- Technical Issues Related to Laser Cleaning Astronomical Telescopes
  - Determining optimum technique (e.g., laser pulse energy, # of shots/site, pulse repetition rate) — depends on contaminant
  - Solving engineering issues such as best method for delivering laser beam and removal of expelled dust
- STI Optronics is Interested in Working With Observatories to Develop This Application
  - Collaborating with University of Washington Astronomy Department on joint proposal
  - In discussions with National Optical Astronomy Observatory
  - Please contact Wayne Kimura at STI Optronics for more information

STI OPTRONICS

BACKGROUND

- Telescope Mirrors Degrade Over Time
  - Increase of emissivity and scattering, decrease of reflectivity
  - Recoating large diameter mirrors expensive and risky
  - Need better *in situ* cleaning techniques
- Possible Solution: Use Laser Cleaning
  - Capable of easy and safe *in situ* cleaning
  - Frequent cleaning possible (e.g., daily) — ensures continual optimum telescope performance
  - Clean during daytime to minimize telescope downtime
- UV Laser Cleaning of Small Diameter Mirrors Has Already Been Demonstrated
  - UV light better than visible or IR light
  - Excimer UV lasers readily available commercially

STI OPTRONICS

REVIEW OF BASIC CLEANING MECHANISM

- Molecular Contaminant Removal
  - Photochemical dissociation
    - molecular binding energies are typically several eV
    - easily broken by UV light
  - Photothermal processes
    - direct absorption of UV laser energy by contaminant
    - minimizes laser energy needed to clean surface
- Particulate Removal
  - Absorption of laser light leading to vaporization
  - Generation of opto-acoustic stress wave
    - particles literally bounce off surface
    - requires pulsed laser source, such as an excimer laser
  - Electrostatic bond breaking between mirror surface and particulate
- Uniform Laser Beam Profile Important for Effective Removal

STI OPTRONICS

COMPARATIVE EVALUATION
CO_2 AND UV EXCIMER LASER CLEANING OF MIXED CONTAMINANT LAYER (PARTICULATES/DIOCTYL PHTHALATE) ON Al–COATED Si

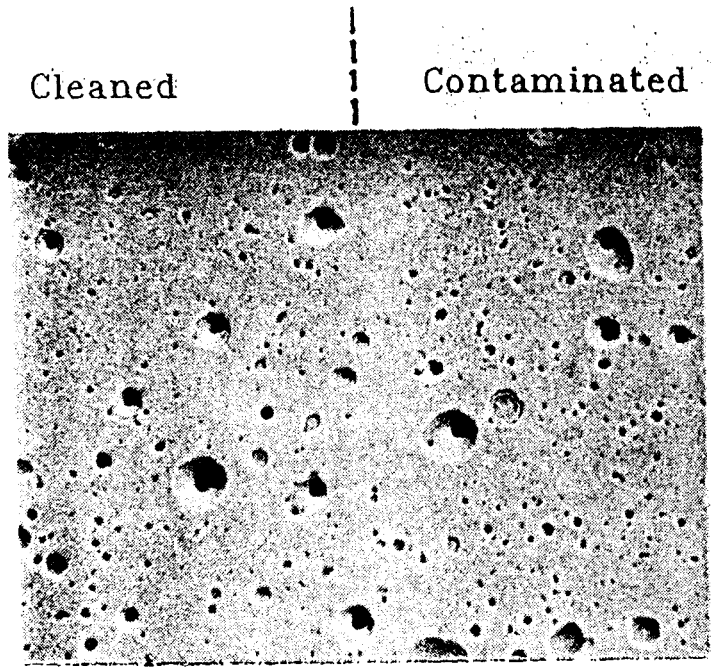

50 um

CO_2 (5.5J/cm^2)
(no effective removal)

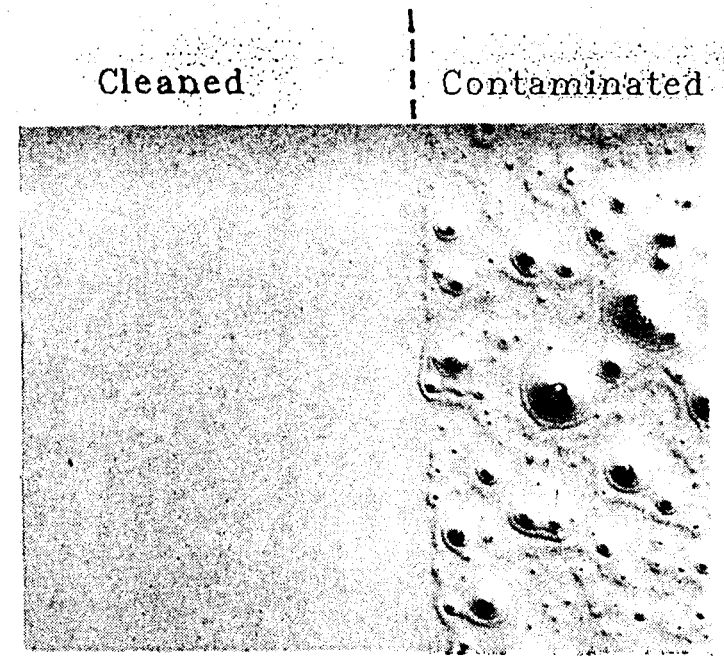

50 um

UV (0.3 J/cm2)
(complete removal)

STI OPTRONICS

KITT PEAK NATIONAL OBSERVATORY

SCHEDULES AND STAFFING

FOR MAINTENANCE OF TELESCOPE OPTICS

COATING SCHEDULES:

ALL TELESCOPE OPTICS ARE REALUMINIZED ONCE A YEAR EXCEPT FOR THE 2.1 METER AND 4 METER TELESCOPES. DUE TO THE TIME AND EFFORT REQUIRED FOR REALUMINIZING THE 2.1 METER AND 4 METER TELESCOPE OPTICS, THEY ARE BEING REALUMINIZED EVERY THREE TO FIVE YEARS.

WASHING SCHEDULES:

ALL TELESCOPE MIRRORS ARE WASHED A MINIMUM OF ONCE EVERY SIX MONTHS.

STAFFING:

- PART TIME SERVICES OF ONE ENGINEER FOR SCHEDULING AND TECHNICAL SUPPORT.
- PART TIME SERVICES OF TWO TRAINED TECHNICIANS FOR WASHING, COATING, AND OVERSEEING ALL MIRROR HANDLING.
- PART TIME SERVICES OF REGULAR MOUNTAIN OPERATIONS TECHNICIANS TO ASSIST IN MIRROR REMOVALS.

KITT PEAK ALUMINIZING CAPABILITIES

2.4 METER & 4 METER COATING CHAMBER FACILITIES

I. Both coating chambers are permanently installed in fixed locations (aluminizing rooms) and all optics are transported to the aluminizing rooms for coating.

II. The aluminizing rooms are fully equipped to handle all mirror operations. Each room has overhead cranes to handle the optics and washing facilities for stripping and cleaning the mirrors.

III. It has been Kitt Peak's experience that the use of stationary coating chambers and fully equipped aluminizing rooms has provided quick turn-around times and minimum down time due to equipment failures. About the only maintenance required on any of the chambers is the standard preventive maintenance activities.

NOTE

Originally, the 4-meter chamber was designed to be moved to the main floor of the 4-meter building for aluminizing the primary mirror and the mirror was to be installed in the chamber on its cell. In practice, it was found to be much easier, quicker, and safer to remove the mirror from its cell and transport the mirror to the chamber on the ground floor of the building.

COATING CHAMBER DETAILS

1. Only aluminum coatings are currently being done in both chambers.

2. Both chambers are only capable of using filament arrays for evaporations.

3. Both chambers are using diffusion pumps and meissner traps.

4. Only the 4-meter chamber has glow discharge capabilities which is not currently in use.

5. Both chambers have never experienced any major mechanical problems in over twenty years of use and the coatings produced in both chambers are of equal quality.

PERFORMANCE OF COATING CHAMBERS

4 METER CHAMBER

DESIGN PERFORMANCE SPECIFICATION;

Coating Uniformity:	±5%
Deposition Thickness:	≥1000Å

DELIVERED PERFORMANCE;

Coating Uniformity:	±27% thickness variation under the best conditions.
Deposition Thickness:	Maximum thickness seldom approached 800Å (Usually 400Å - 600Å)

CURRENT PERFORMANCE;

In 1985, modifications were made to the filament arrays, the filament baffles, and power distribution circuit.

Coating Uniformity:	Better than ±10%.
Deposition Thickness:	Approximately 1000Å

2.4 METER CHAMBER

DELIVERED AND CURRENT PERFORMANCE:

Coating Uniformity:	±10%
Deposition Thickness:	800Å - 1000Å

4 METER CHAMBER MODIFICATIONS

FILAMENT ARRAY ARRANGEMENTS:

ORIGINAL FILAMENT CONFIGURATION

ARRAY NUMBER	ARRAY DIAMETER (CM)	NUMBER OF FILAMENTS
1	165	16
2	231	20
3	282	32
4	363	36

MODIFIED FILAMENT CONFIGURATION

ARRAY NUMBER	ARRAY DIAMETER (CM)	NUMBER OF FILAMENTS
1	25	4
2	363	36

BAFFLE ARRANGEMENT:

The baffles were catching much of the evaported material.

The baffles were raised closer to the filaments increasing the angle of incidence of the deposition on the substrate from 20 degrees to 45 degrees.

PERFORMANCE:

The ±10% coating uniformity achieved with these changes was adequate for all known NOAO coatings. The cost for further uniformity improvements was prohibitive.

MIRROR REFLECTIVITY MEASUREMENTS FOR REALUMINIZED MIRRORS

TELESCOPES	CHAMBER	3500Å	5500Å	22000Å
WIYN 3.5M	4 METER	91.7%	89.5%	95.3%
0.9M	4 METER	85.2%	87.1%	94.9%
U of A (2M)	4 METER	88.7%	89.0%	95.4%
#1 VACUUM	2.4 METER	89.2%	90.3%	95.4%
#2 VACUUM	2.4 METER	88.1%	90.2%	95.7%
McMATH MAIN #1	2.4 METER	89.5%	90.3%	95.4%
McMATH WEST AUX #1	2.4 METER	88.5%	90.5%	95.9%
McMATH EAST AUX #1	2.4 METER	90.0%	90.2%	96.2%
COUDÉ FEED #2	2.4 METER	88.5%	89.5%	95.7%

MIRROR CLEANING PRIOR

TO ALUMINIZING

1. ALL LARGE TELESCOPE OPTICS ARE STRIPPED AND CLEANED IN THE ALUMINIZING ROOM.

2. THE MIRRORS ARE REMOVED FROM THEIR HANDLING CARTS OR CONTAINERS AND PLACED ON STANDS OVER THE FLOOR DRAINS FOR STRIPPING AND CLEANING.

3. IMMEDIATELY AFTER THE MIRRORS HAVE BEEN CLEANED THEY ARE PLACED IN THE CHAMBERS FOR COATING.

4. THE COATING CHAMBERS ARE PREPPED AND READIED FOR FIRING PRIOR TO BRINGING THE MIRRORS INTO THE ROOM FOR CLEANING.

PROCEDURE FOR STRIPPING AND CLEANING MIRRORS PRIOR TO ALUMINIZING

The following solutions are used in this process:

Solution "A": Mix Hydrochloric Acid (HCL, 37%), Reagent grade, with distilled water in a ratio of 1:1. Then add 28 grams of Copper Sulfate ($CuSO_4$), Reagent grade, per liter of solution and shake until dissolved.

Solution "B": Mix distilled water with Potassium Hydroxide (KOH), Reagent grade, in a ratio 20:1 and shake until dissolved.

Solution "C": Mix Nitric Acid (HNO_3, 70%), Reagent grade, with distilled water in a ratio of 1:1.

1. Rinse mirror thoroughly with filtered tap water.

**** Wear Protective Rubber Gloves for the Following Steps ****

2. Remove any oil spots with Acetone or Xylene.
3. Apply Solution "A" to mirror surface. Using lint-free tissues soaked in solution "A", rub the surface briskly to remove the coating.
4. Rinse mirror thoroughly with filtered tap water.
5. Repeat steps 3 and 4 until old coating is completely removed.
6. Apply solution "B" to mirror surface and rub briskly with lint-free tissues.
7. Rinse mirror thoroughly with filtered water.
8. Reapply solution "B", spread a light coating of Calcium Carbonate (Reagent grade) over the entire surface, and rub the surface with lint-free tissues.
9. Rinse mirror thoroughly with filtered tap water.
10. Repeat steps 8 and 9 several times.
11. Apply solution "C" to mirror surface and rub briskly with lint-free tissues.
12. Rinse mirrior thoroughly with filtered tap water for 5-10 minutes.

**** Remove Gloves ****

13. Apply enough distilled water to thoroughly rinse off tap water.
14. Wipe surface dry with lint-free tissues. Do not let standing water air-dry on surface.
15. Use filtered gaseous nitrogen (N_2) to blow off any dust or lint.
16. Mirror is now ready for aluminizing.

TELESCOPE MIRROR WASHING

CURRENT PRACTICE (ALL TELESCOPES):

1. Mask off surface of mirror from rest of telescope with plastic sheeting and tape.

2. Position telescope to permit wash solution to drain out holes provided for water removal.

3. Wash mirror in accordance with the approved wash procedure (see attachment).

4. Remove any excess water from the cell area with a wet or dry shop vacuum cleaner.

5. Remove plastic sheeting.

EXPERIENCE:

For several years strippable plastic coatings were successfully used for cleaning mirrors, but has been discontinued due to the potentially hazardous chemicals some of them contain.

CLEANING PROCEDURE FOR COATED MIRRORS

I. Required Supplies:

a. Two 20-liter, hand-operated, pressure sprayers.
b. Two liters of reagent grade alcohol.
c. One tablespoon of Alconox (phosphorus-free detergent soap).
d. Ten liters of distilled water.
e. One half liter of acetone or xylene.
f. Several clean sponges.
g. Several boxes of lint-free tissues.

II. Cleaning Procedure:

a. Clean spray containers thoroughly with distilled water and alcohol.

b. Fill "Rinse" container

1/2 full distilled water
1 liter of alcohol

c. Fill "Wash" container

1/2 full water
1 teaspoon Alconox
1/4 liter alcohol

d. Use acetone or xylene to remove any oil stains.

e. Spray mirror with "Wash" until all loose particles are removed and gently rub surface with wet sponges.

f. Spray with "Rinse."

g. Use tissues to tamp surface dry. DO NOT RUB!

PRIMARY MIRROR HANDLING

2.1 & 4 METER TELESCOPES

MIRROR REMOVAL AND INSTALLATION:

1. THE LARGE TELESCOPE MIRRORS ARE REMOVED AND INSTALLED WITH THEIR CELLS ONTO MOBILE HANDLING CARTS.
   a) 4 METER USES THE 4 METER COATING CHAMBER CART.
   b) 2.1 METER USES A SEPARATE CART DESIGN SPECIFICALLY FOR THE TASK.

MIRROR HANDLING FOR WASHING, AND COATING:

1. THE LARGE MIRRORS ARE HANDLED SEPARATELY WITH THE AID OF OVERHEAD CRANES AND CENTER LIFTING FIXTURES FOR MOVING THEM ON AND OFF OF THEIR CELLS, INTO THE CLEANING BAY, AND ONTO THE COATING CHAMBER CARTS FOR ALUMINIZING.

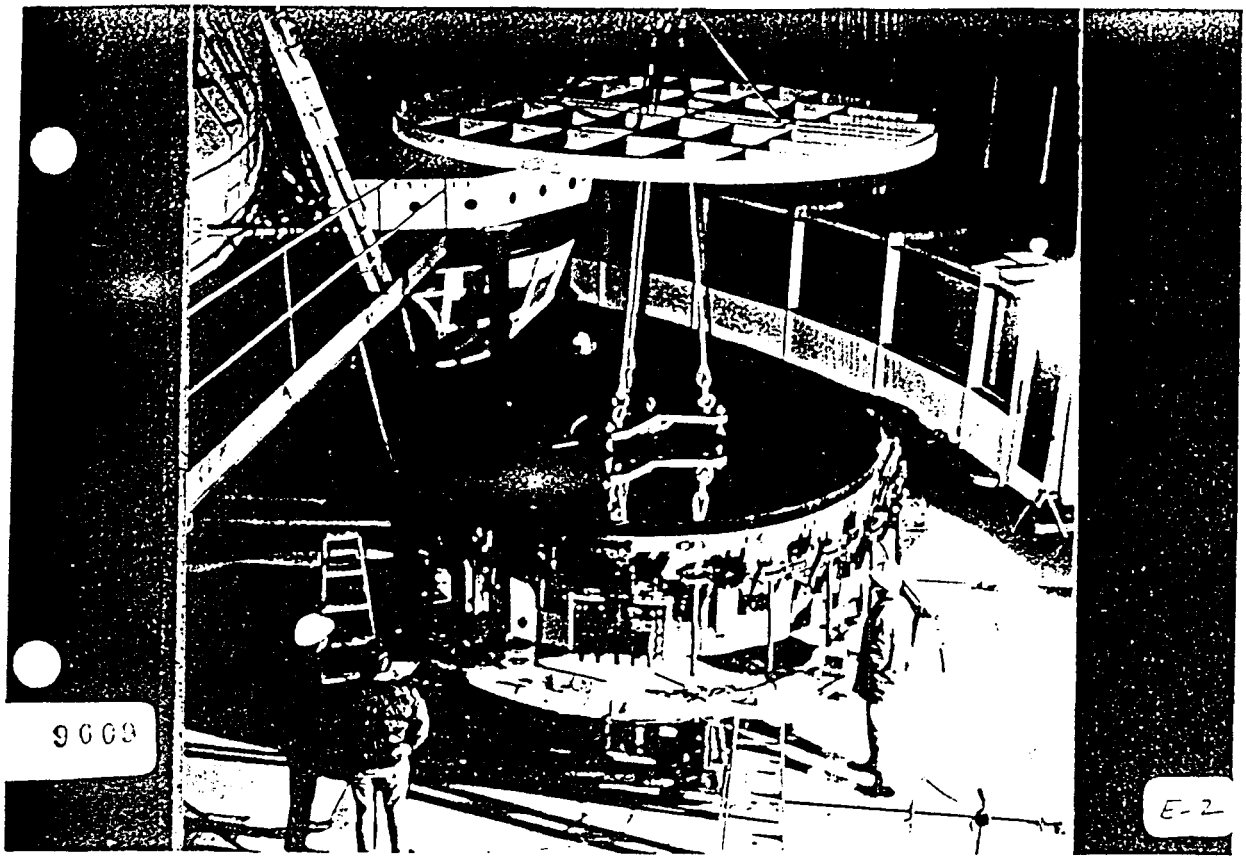
9009
E-2

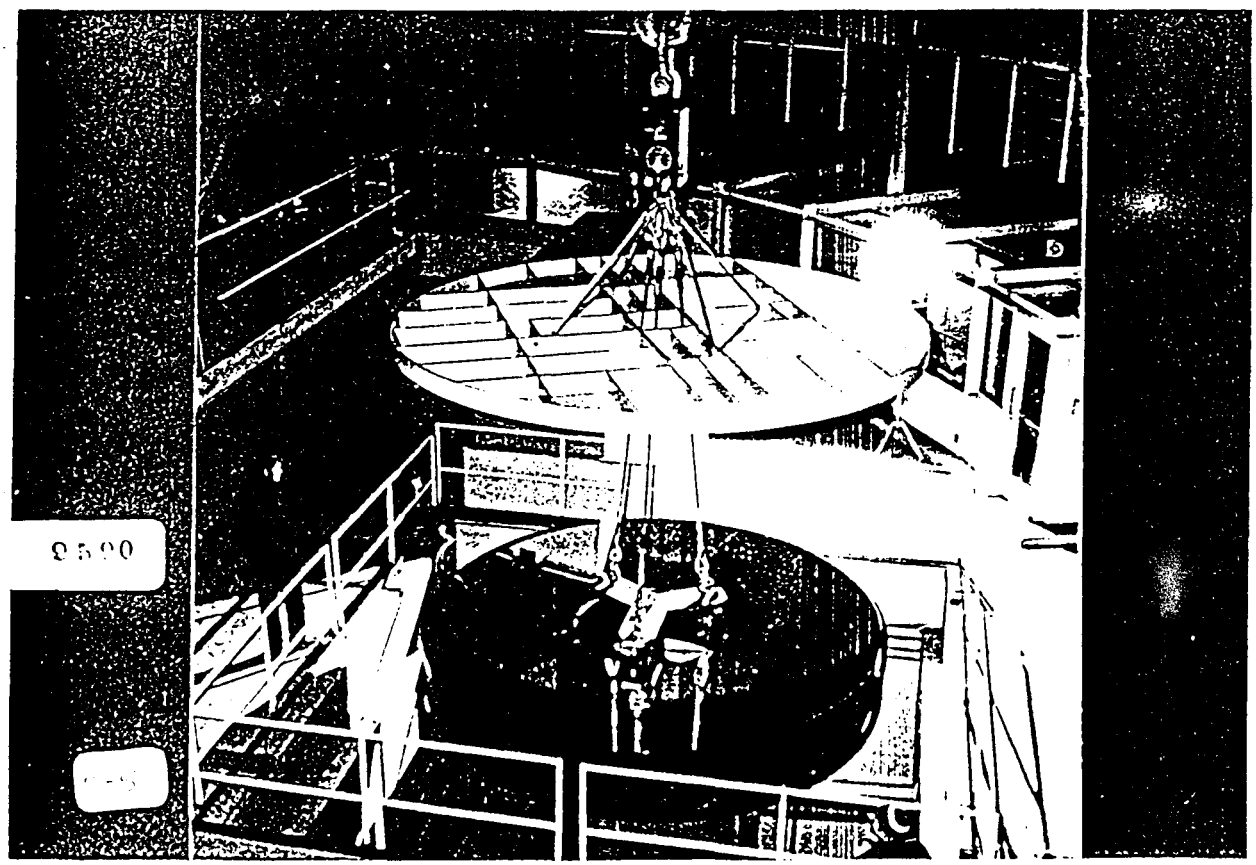
9500

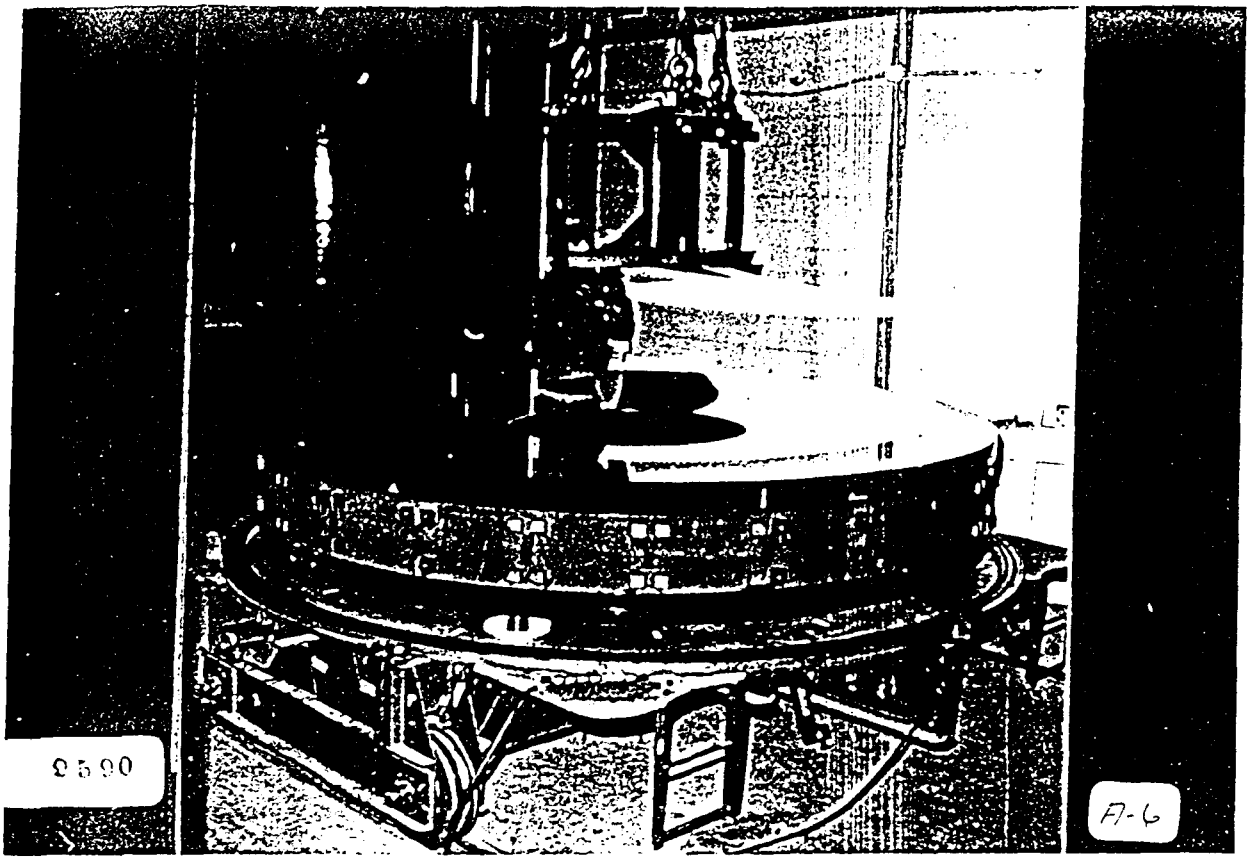
2590
A-6

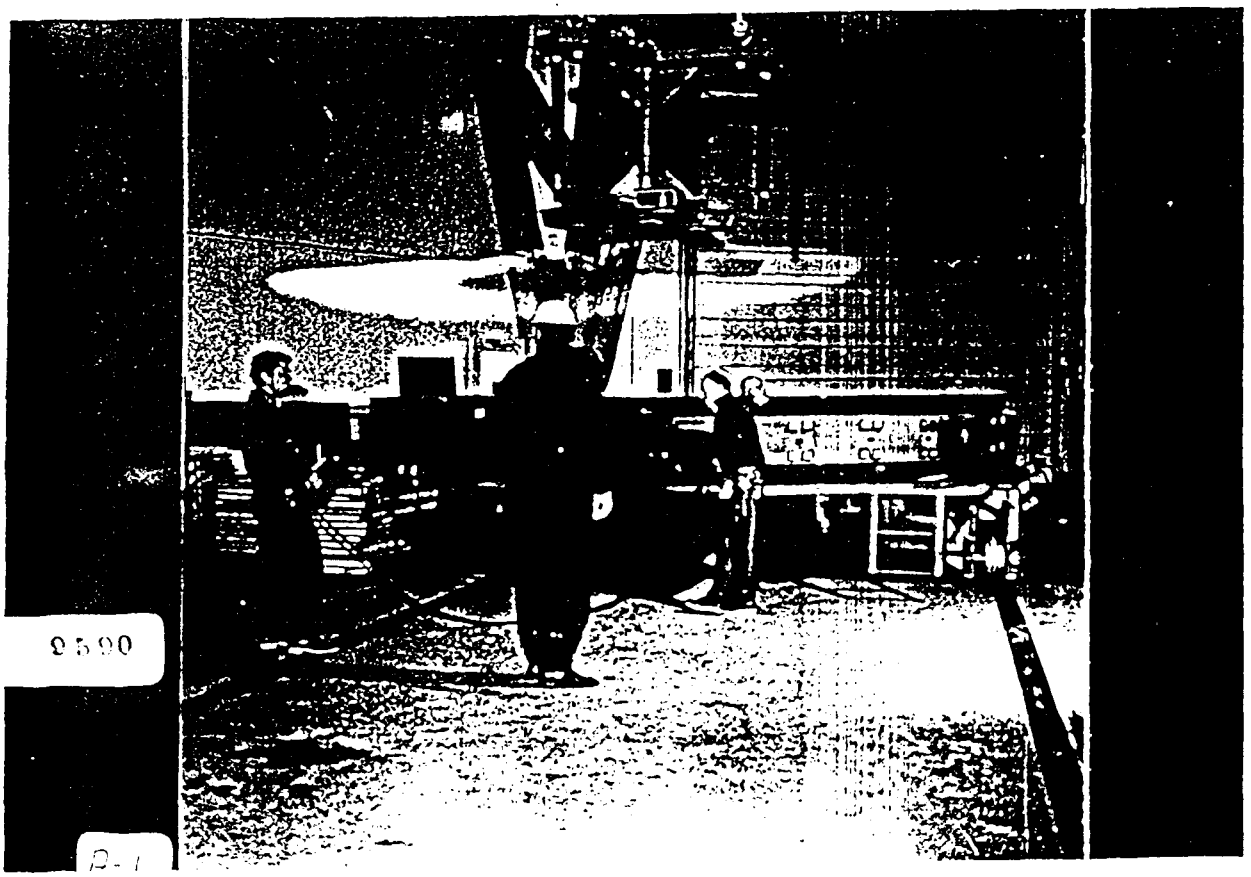
2590
A-1

Japanese National Large Telescope

Presentation by M. Nakagiri

an 8-m optical-infrared telescope project

SUBARU

Voyage to the Unknown

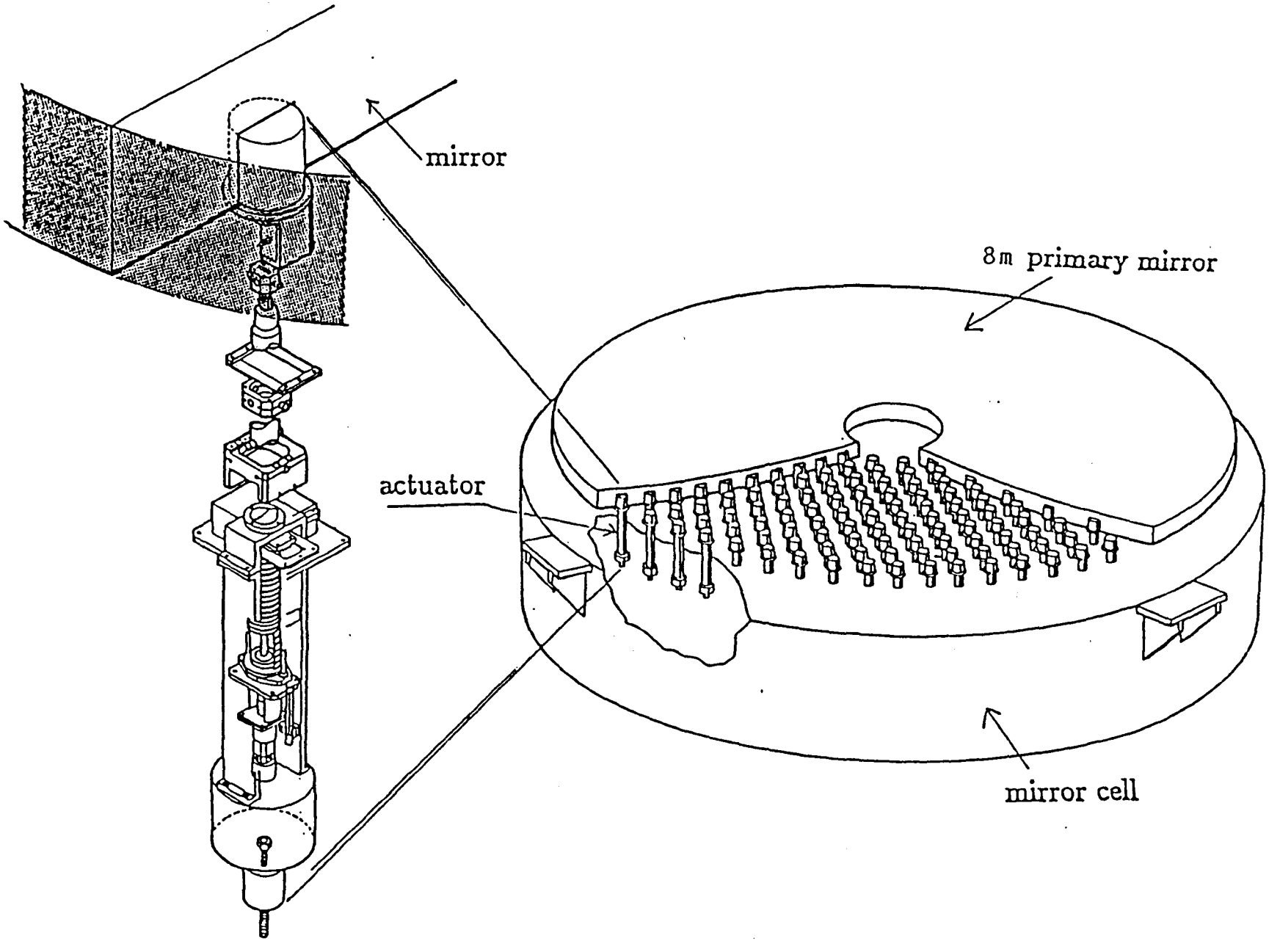
mirror
8m primary mirror
actuator
mirror cell

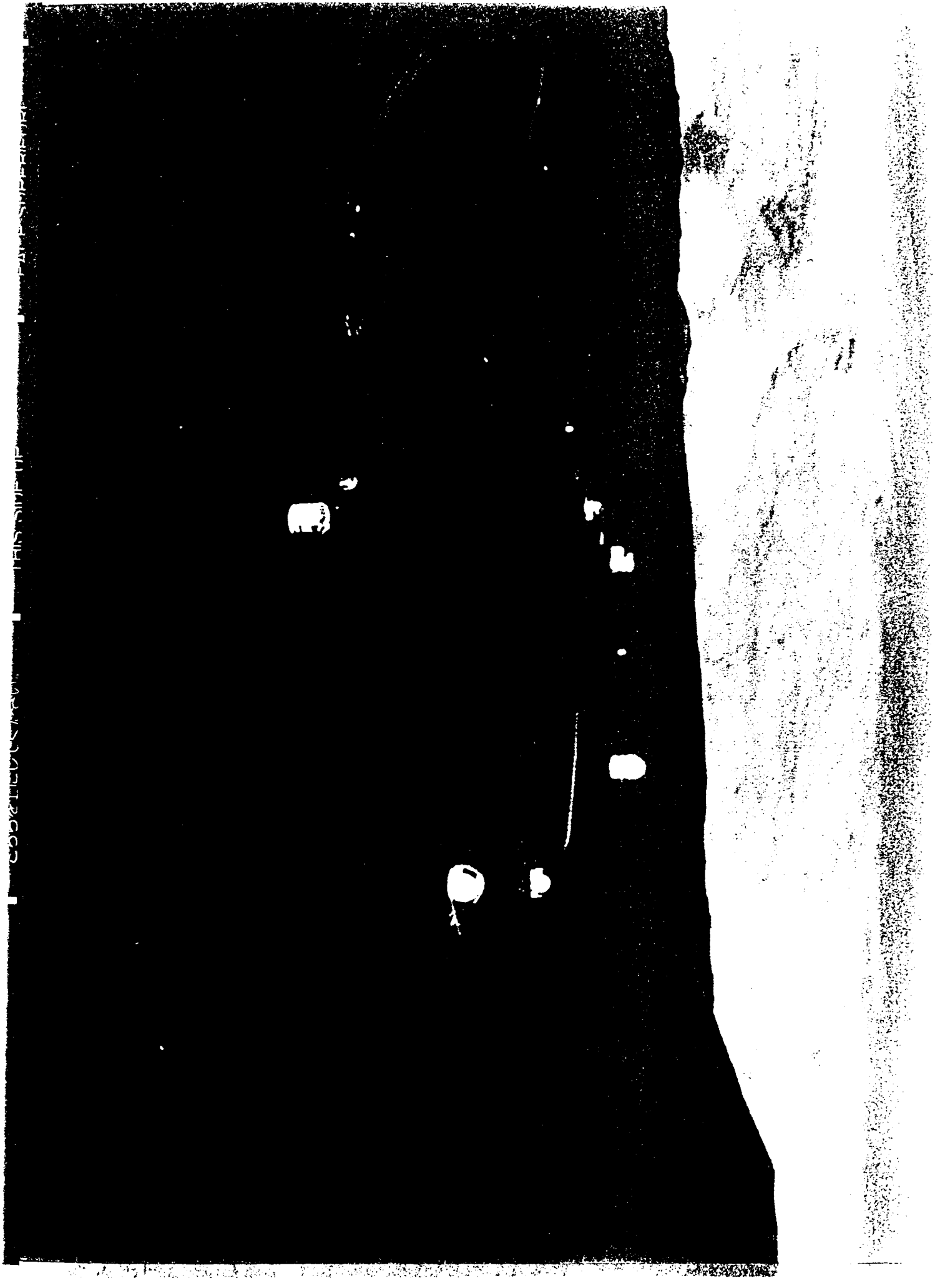

UP SUPERIEURE OBEN おもて

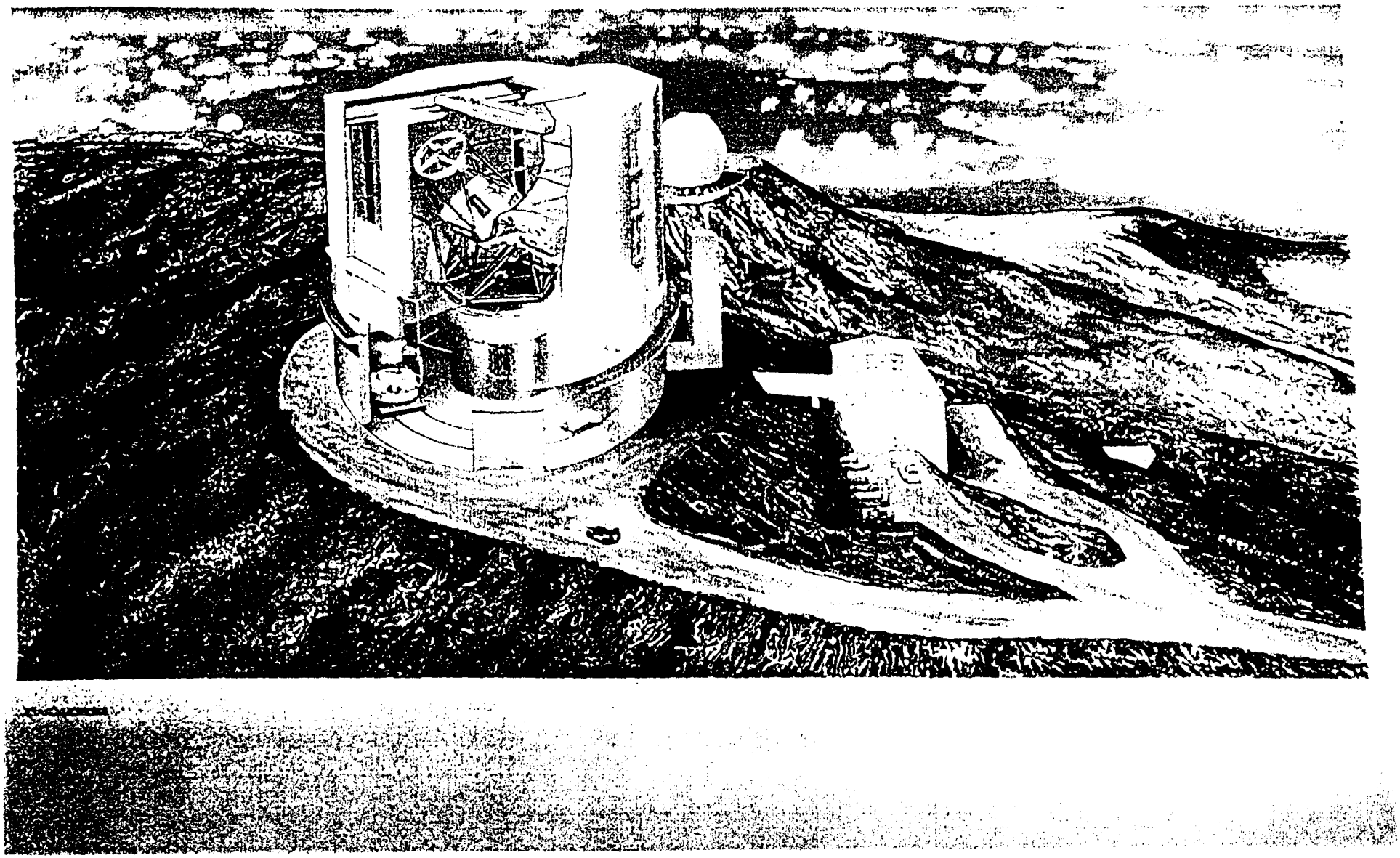

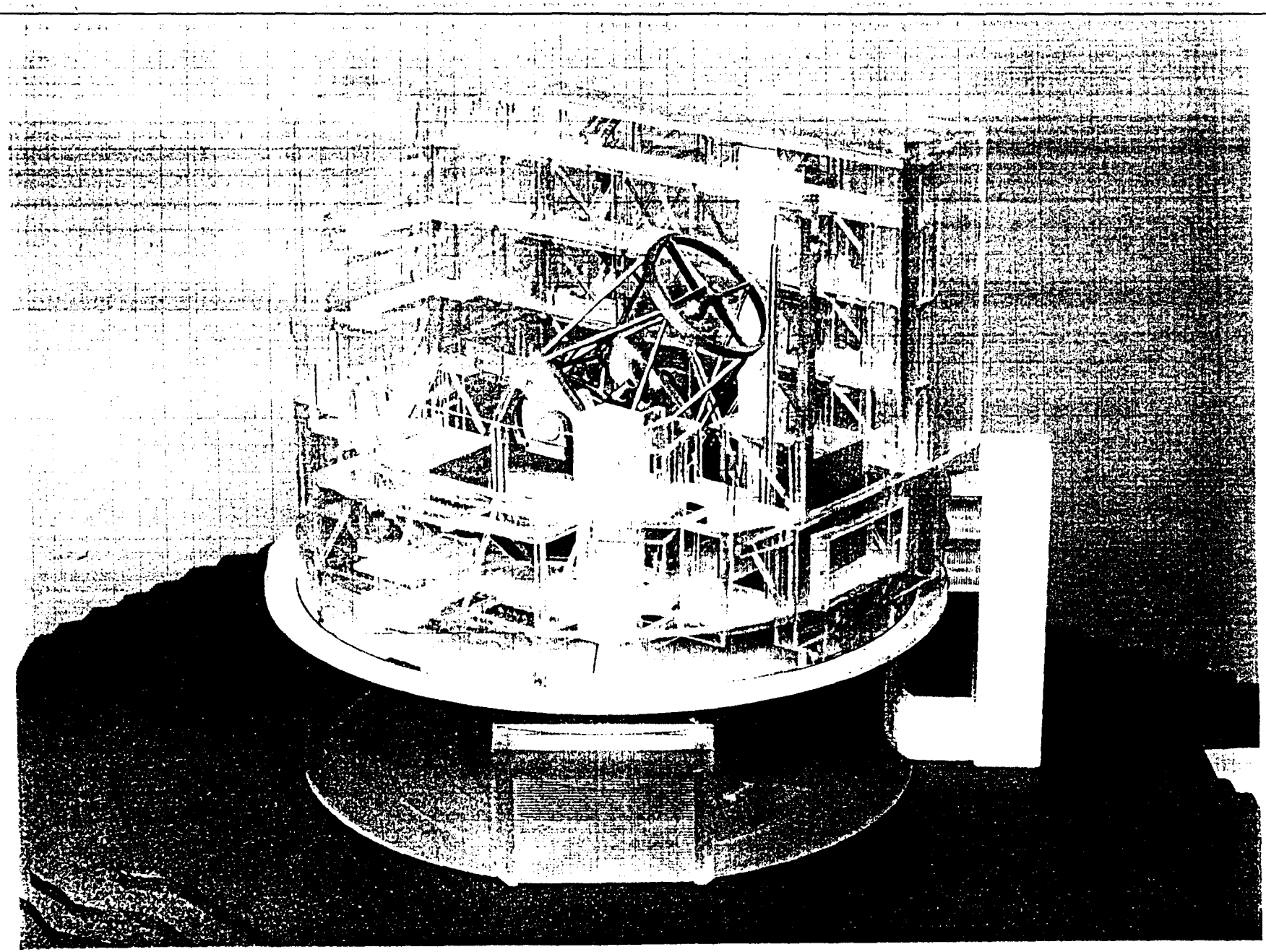

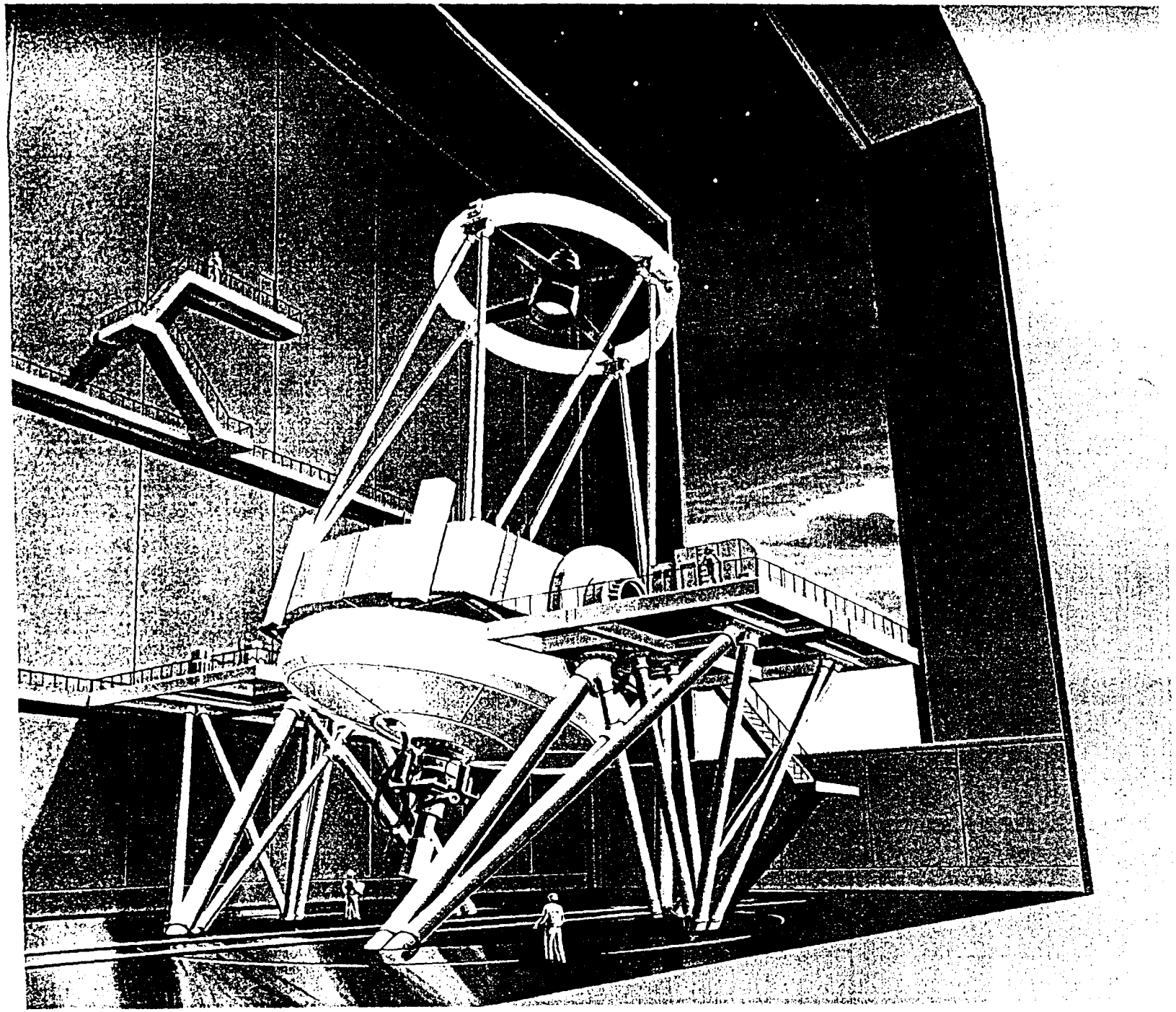

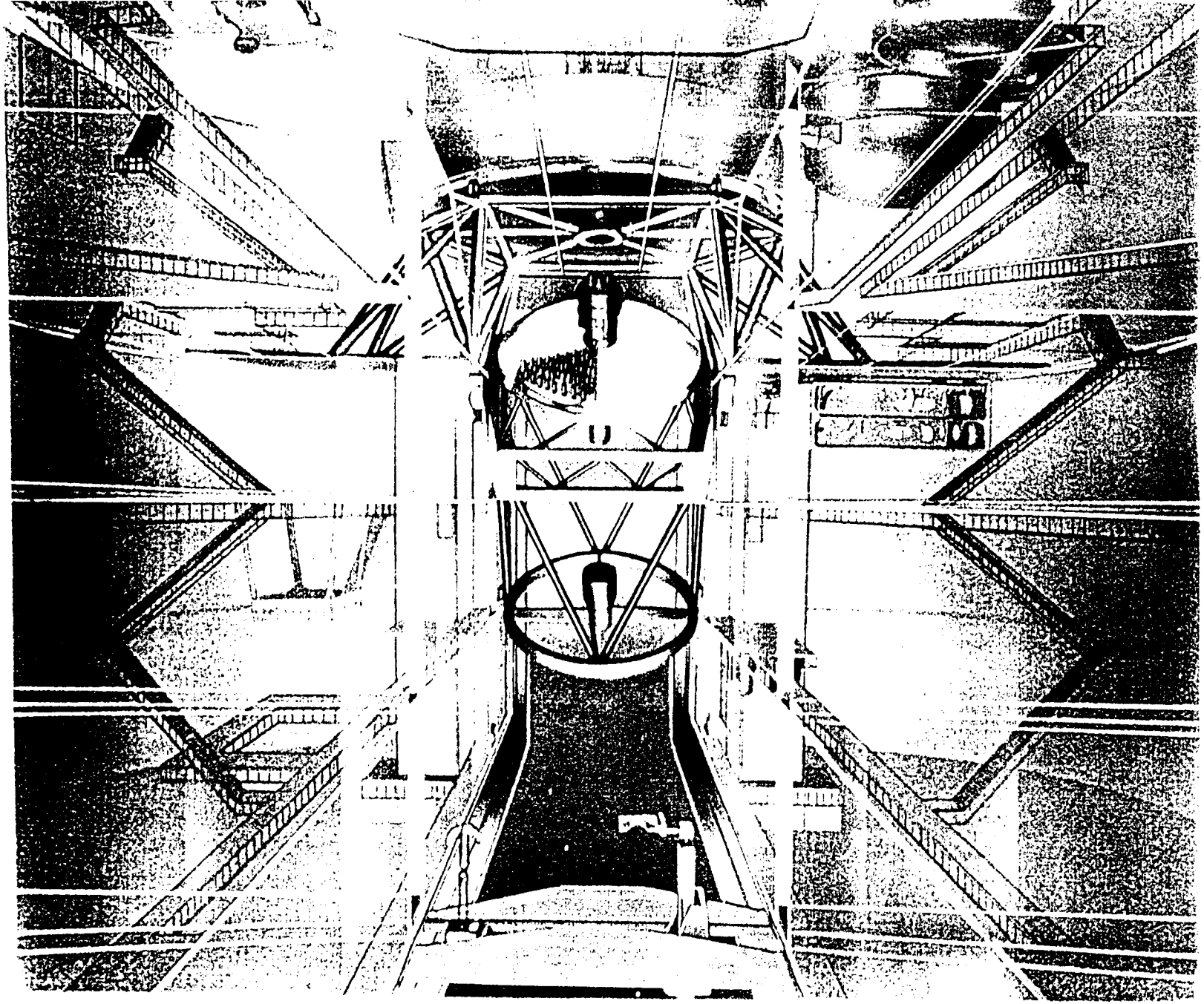

Coating Procedure of SUBARU Telescope

① Outgasing the Vacuum Chamber

② Lockup the Telescope

③ Carriage Move in under the Telescope

④ Demount the Mirror(Cell)

⑤ Lower the Mirror(Cell) on the Carriage

⑥ Move the Carriage on the Mirror Hatch

⑦ Lift up the Mirror(Cell)

⑧ Carriage Move out

⑨ Lower the Mirror (Cell) to Vacuum Facility

⑩ Cleaning, Removal of Coating

⑪ Cleaning, Drying

⑫ Put the Mirror (Cell) in the Vacuum Chamber

⑬ Vacuum Pumping + Ion Bombardment

Aluminizing

Reverse Operation

第４図　望遠鏡構成表

- 望遠鏡観測装置
  - 望遠鏡
    - 光学系
      - 主鏡
      - 主焦点光学系：青
      - 主焦点光学系：赤
      - 光学用F/12.5副鏡
      - 赤外用F/12.5副鏡
      - 赤外用F/35振動副鏡
      - 光学用第３鏡
      - 赤外用第３鏡
      - 光学用クーデリレー系
      - 赤外用クーデリレー系
      - 天体確認追尾装置
      - シャックハルトマン式鏡面検査装置
    - 鏡筒部
      - 副鏡／主焦点部
        - 両頂構造（トップリング）
        - 合焦機構
        - 赤外用F/35振動副鏡振動装置
        - 副鏡セル
        - 主焦点インストルメントローテータ
        - 主焦点ケージ
        - バランス調整装置
      - 鏡筒構造部
        - トラス
        - センタセクション
        - バランス調整装置
      - 第３鏡部
        - 第３鏡支持機構
        - 第３鏡カバー
      - 主鏡部
        - 主鏡能動支持機構
        - 排熱システム
        - 主鏡セル
        - 主鏡カバー
        - スライバッフル
        - カセグレン焦点インストルメントローテータ
        - カセグレンケージ
    - 架台部
      - 架台構造部
        - 高度軸
        - 高度軸受・油圧発生装置
        - 高度軸ケーブル巻取装置
        - ナスミス台
        - ナスミス焦点インストルメントローテータ（光学用／赤外用）
        - イメージローテータ（光学用／赤外用）
        - ナスミス焦点観測室空調装置（光学用／赤外用）
        - クーデリレー光学系取付部
        - 方位軸
        - 方位軸受・油圧発生装置
        - 方位軸ケーブル巻取装置
        - 架台基礎・水平調節機構
        - 架台空調装置・排熱システム
        - 減圧用配管
      - 高度軸駆動部
        - 高度軸駆動機構
        - 高度軸角度検出機構
        - 高度軸リミット機構
      - 方位軸駆動部
        - 方位軸駆動機構
        - 方位軸角度検出機構
        - 方位軸リミット機構
    - 制御系
      - 制御装置
        - 望遠鏡駆動制御装置
        - 主鏡支持機構制御装置
        - 合焦機構制御装置
        - 赤外用F/35振動副鏡制御装置
        - インストルメント/イメージローテータ制御装置
        - 天体確認追尾制御装置
        - 時刻較正装置
        - 第３鏡駆動制御装置
        - 第３鏡交換制御装置
        - トップリング交換制御装置
        - 観測装置移動制御装置
        - 気象観測装置
        - 制御コンソール類
        - 光通信網
      - 制御用計算機
        - 望遠鏡制御用計算機
        - 保守・機器交換用計算機
        - ハウスキーピング用計算機
        - 観測装置制御用計算機
      - 自家発電・無停電電源
        - 自家発電・無停電電源
        - 安定化電源
    - ドーム
      - ドーム上部構造
        - ドーム設構造
        - レール
        - ドーム床構造
        - 内部構造
      - ドーム回転機構
        - ドーム駆動装置
        - 駆動制御装置
        - 安全確認装置
        - 集電装置
        - エアシール
      - スリット及びウィンドスクリーン
        - スリット
        - スリット開閉機構
        - ウィンドスクリーン
        - ウィンドスクリーン開閉機構
        - スリット・ウィンドスクリーン制御装置
      - 熱制御系
        - 空調機構
        - 通気機構
      - クレーン等
        - トップリング交換用走行クレーン
        - 主鏡セル着脱機構
        - 固定クレーン
        - 保守運用装置
      - ドーム下部構造
        - ドーム下部設構造
        - ドーム基礎
        - 望遠鏡基礎（ピア）
  - 真空蒸着設備 Coating
    - 大型真空蒸着装置 8m.
    - 中型真空蒸着装置
    - 大型鏡面洗浄装置 Cleaning
  - ~~観測装置~~
    - 主焦点撮像装置
    - 微光天体分光偏光装置
    - 赤外撮像装置
    - 多チャンネル赤外線分光装置
    - 高分散分光装置
  - 天体画像解析システム
    - 国内支援本部
      - 大規模画像解析計算機
      - 画像処理ワークステーション
      - データベースシステム
      - データ通信ネットワークシステム
    - ハワイ観測所
      - 大規模画像解析計算機
      - 画像処理ワークステーション
      - データベースシステム
      - データ通信ネットワークシステム
  - 付帯設備
    - 国内支援本部付帯設備
      - シミュレータ
      - 開発実験調整設備
    - ハワイ観測所付帯設備
      - シミュレータ
      - 開発実験調整設備

SUBARU ≡ JNLT's new name for public

- Primary Mirror 8.3m blank 20cm thick
  supported at 264 points by mech. actuators.

- Coating Plant · Aluminizing for 8.3m blank
  · Sputtering for smaller comp.
  - ※ Mirror {with / without} Cell in Vaccuum Chamber.
  - ※ Horizontal Position

- Cleaning Plant

- Telescope Enclousure Designed to House and Handle 8m Coating/Cleaning Operations

- Schedules.

M. Iye
Mr. N. ITO Principal Engineer (MELCO)
Mr. M. NAKAGIRI Coating Specialist

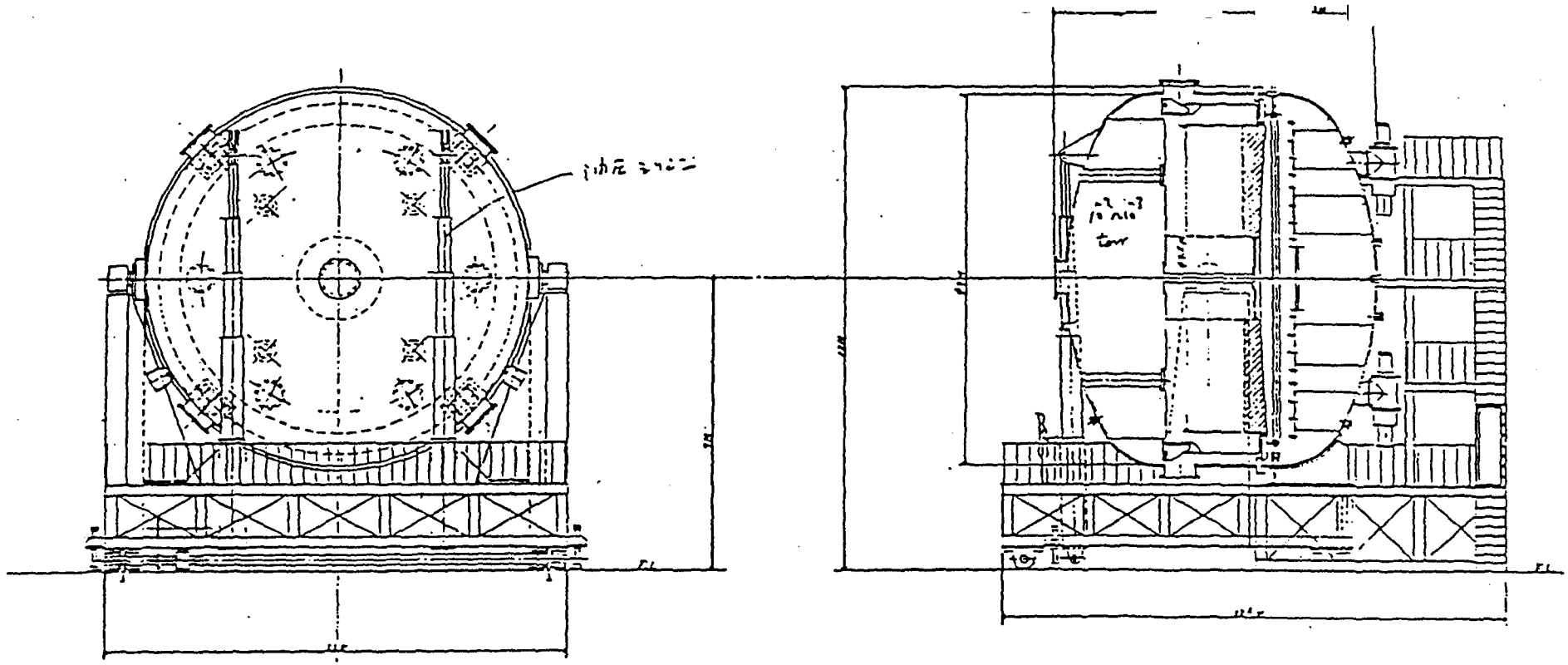

図7.5.3　NV社による横型蒸着用真空槽案

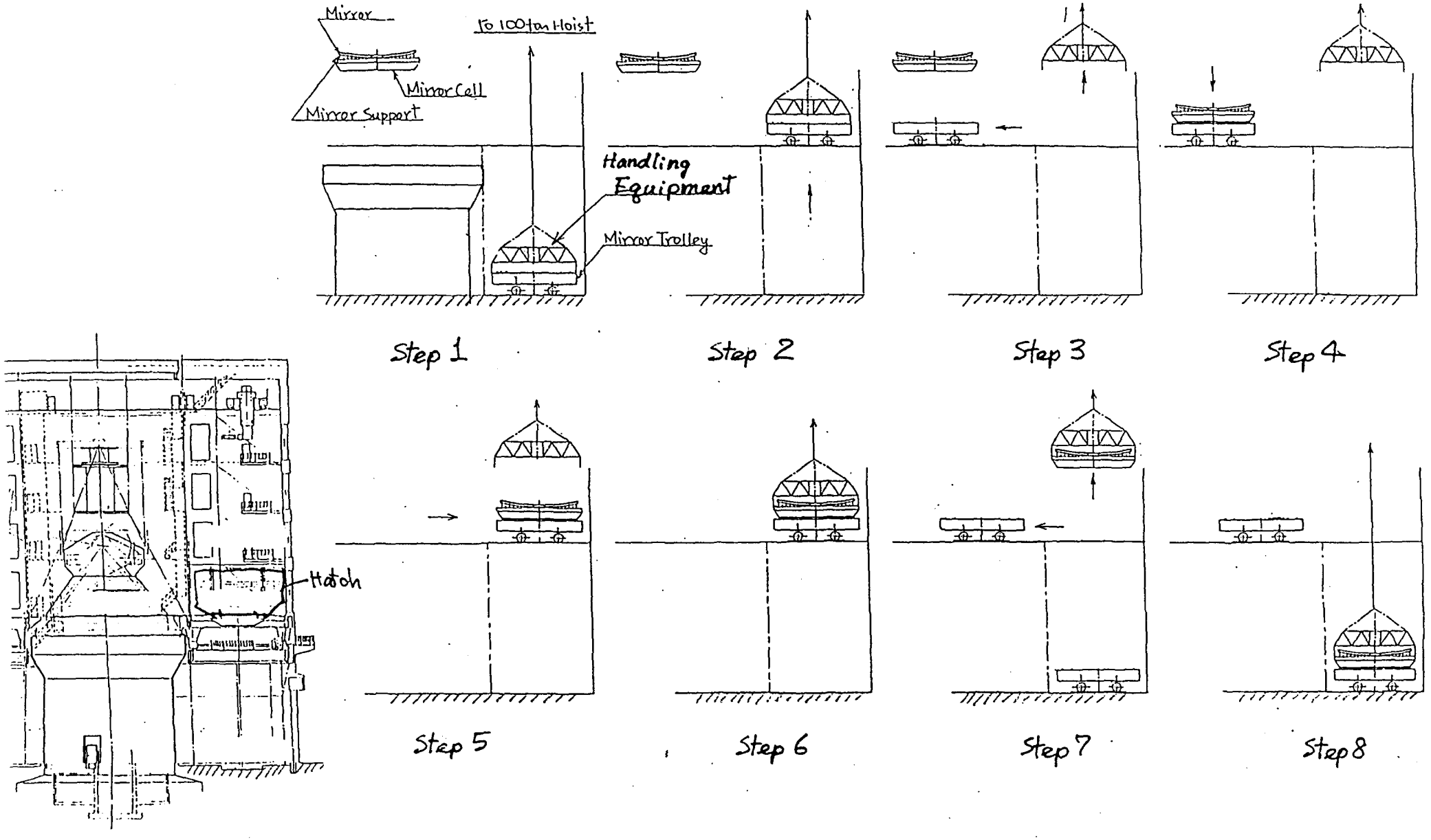

MIRROR HANDLING PROCEDURE

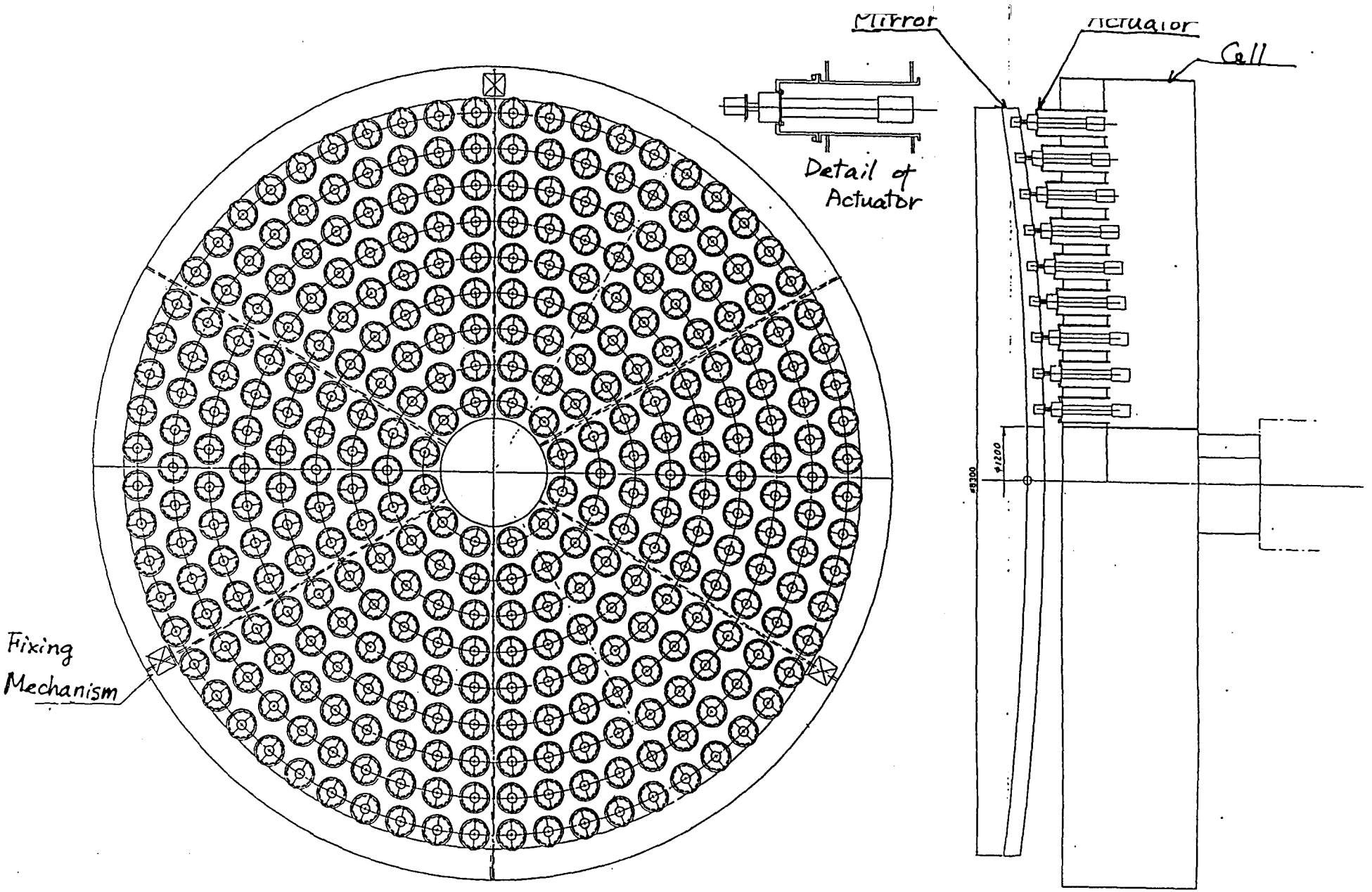

MIRROR SUPPORT SYSTEM

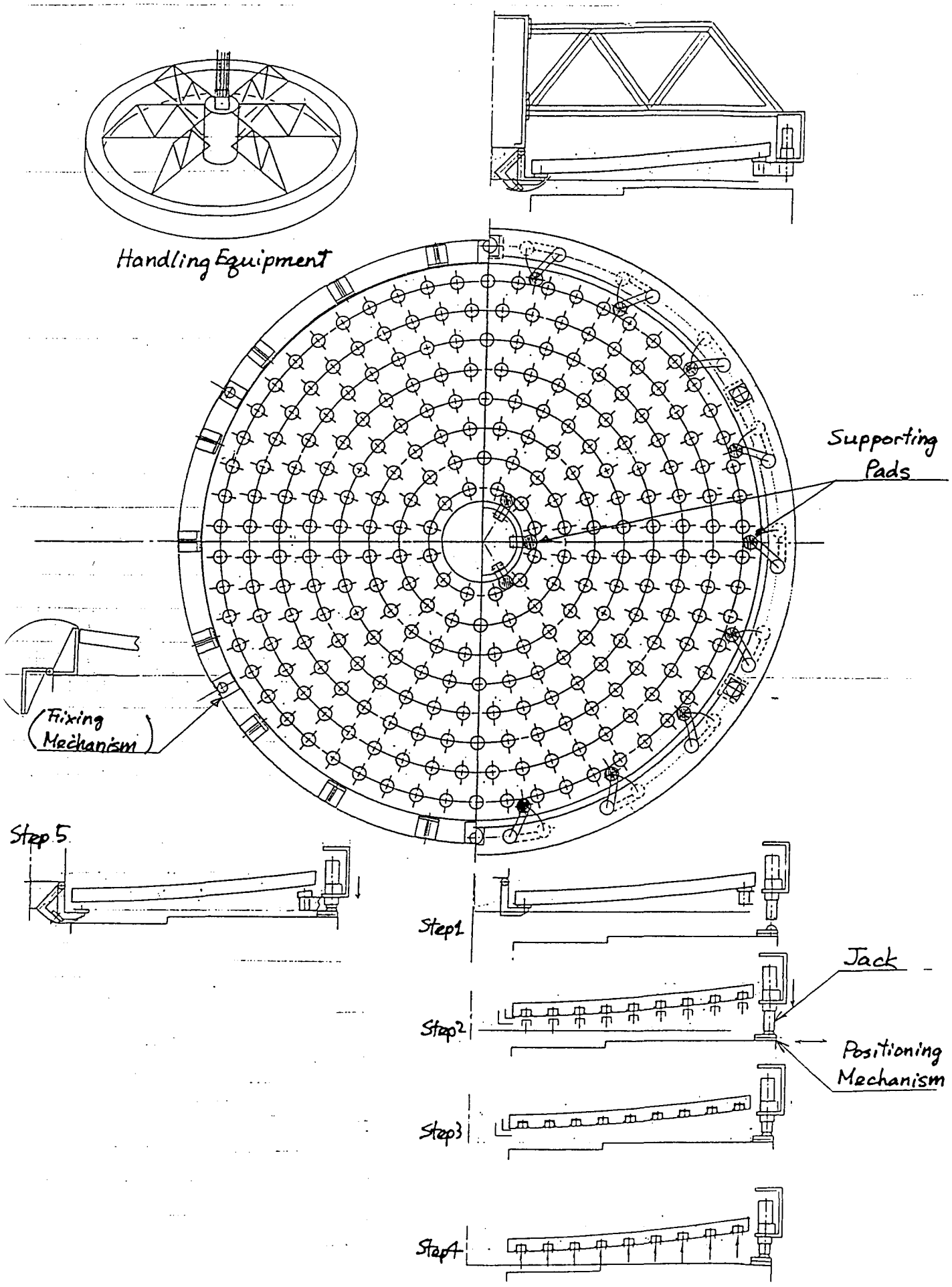
Handling Equipment
Supporting Pads
Fixing Mechanism
Step 5
Step1
Jack
Step2
Positioning Mechanism
Step3
Step4

MIRROR STRESS DURING HANDLING

- Supporting Condition

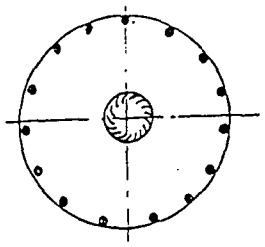

Inside Edge
+
15points on Outside Edge

- Stress Calculation

  - Results of FEM using Model without Holes

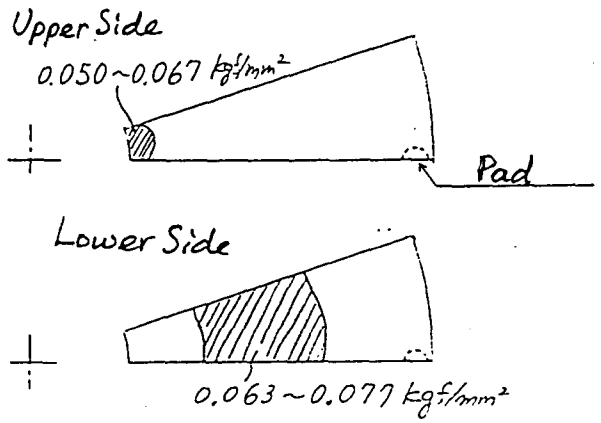

$\sigma = 0.077$ kgf/mm²

  - Effect of Stress Concentration and Lifting Shock

$$\sigma_{max} = 0.077 \times 3 \times 2 = 0.46 \quad < \quad 0.5\ \text{kgf/mm}^2$$

(0.05 MPa)

Allowalbe Stress

Lifting Shock (2G)

Stress Concentration Factor due to Hole

Magellan

Presentation by A. Schier

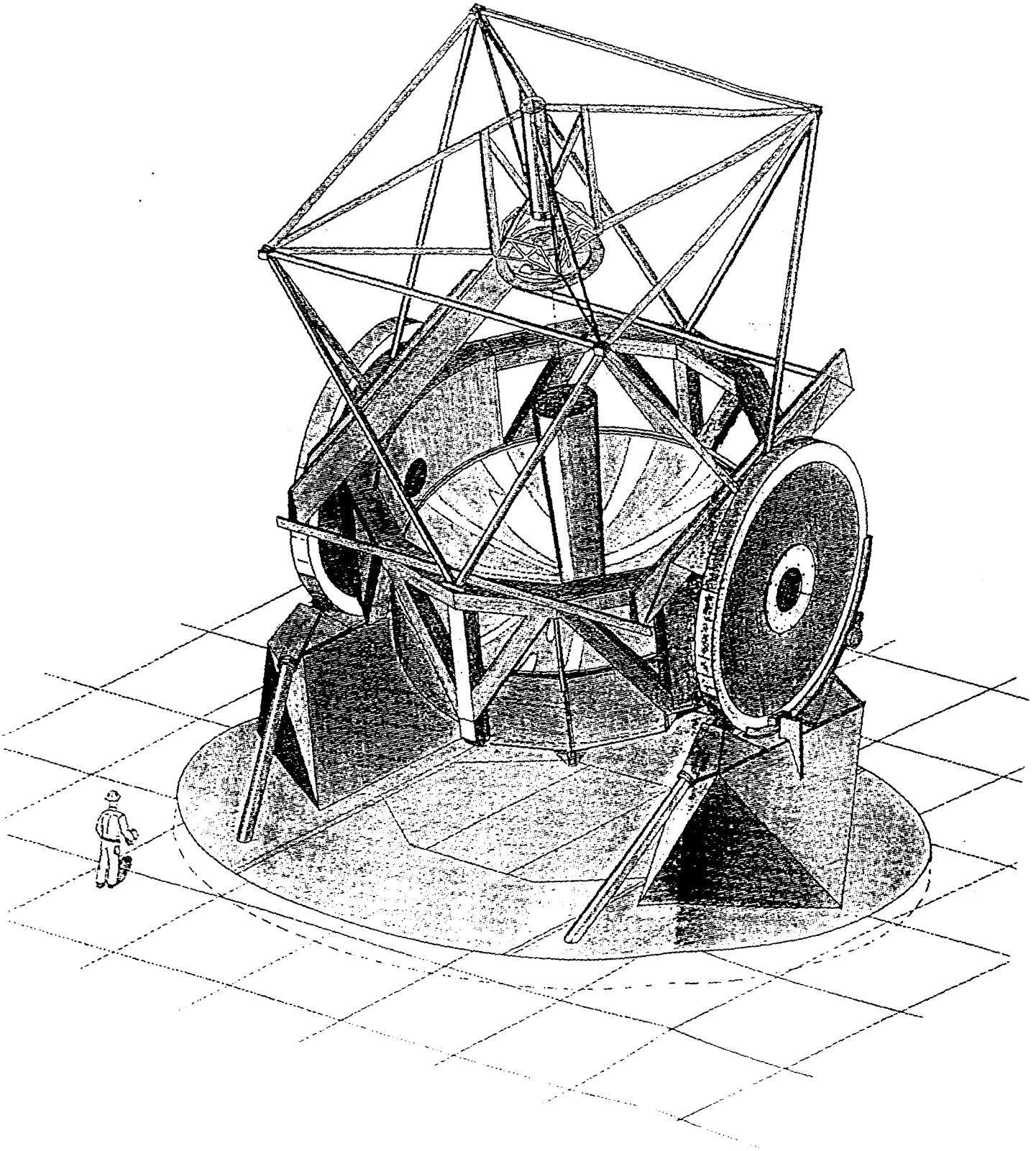

MIRROR HANDLING FOR RECOATING

6.5 METER HANDLING CONCEPTS:

- All mirror handling done on one level with one transport cart. No cranes, elevators, or frayed nerves.
- Cart runs on rails
- Mirror aluminized in the cell. No removal required.
- Mirror cell and cart are bottom sections of vacuum chamber. Cell stays on cart in same orientation once removed from the telescope.
- Alignment for reinstallation achieved with long guide rails and bullet-nosed pins between the cell and telescope. Cart has adequate compliance.
- Gross vertical positioning via power screw jacks. Final positioning via hand-operated hydraulic jacks.

MIRROR HANDLING FOR RECOATING

PRIORITIES:
(Everything assumes adequate personnel safeguards and a good resulting coating)

- **Mirror Security**
- **Simplicity**
  - **Mechanisms and structures**
    - **Better reliability**
    - **Cheaper fabrication**
    - **Cheaper maintenance**
  - **Operations**
    - **Fewer variables (places for mistakes) in the process**
    - **Fewer trained people required**
- **Consistent operations/process**
  - **Few adjustable elements**
  - **No sensitive adjustments required anywhere**

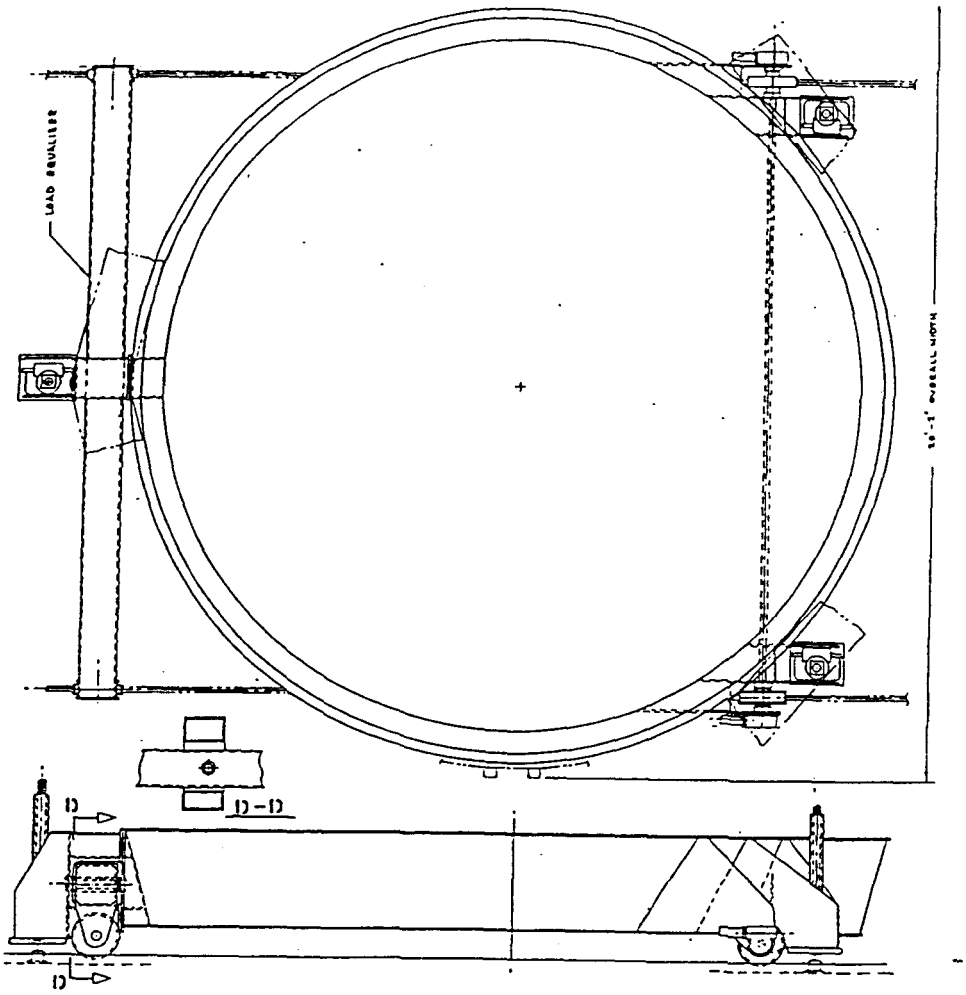
LOAD EQUALIZER
D
D-D
D

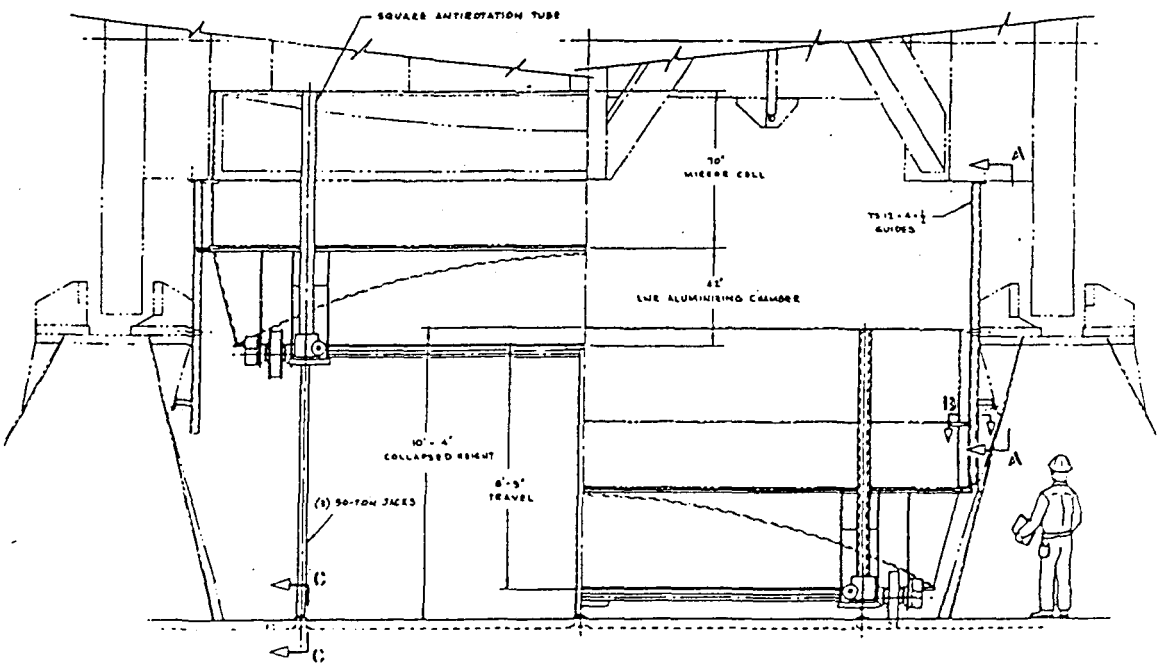
SQUARE ANTIROTATION TUBE
70"
MIRROR CELL
A
GUIDES
42"
LIVE ALUMINIZING CHAMBER
B
A
10'-4"
COLLAPSED HEIGHT
6'-9"
TRAVEL
(2) 50-TON JACKS
C
C

COATING AND COATING EQUIPMENT FOR 6.5 METER

- Process based on currently used techniques (thermal Al evaporation)
- Chamber design:
  - Fixed upper portion, stainless steel
  - Mirror cell and handling cart form lower portion
  - Pumps:
    - 2 48-inch (55,000 l/sec N_2) cryopumps
    - 15hp Roots blower
    - 25hp oil-sealed pump
  - 3 rings of filaments, 336 filaments total, fired all at once
  - 36 getter filaments
  - Simple seal to segregate upper (clean) vacuum chamber from lower chamber
- Priorities: (within the constraint of personnel and mirror safety)
  - Cleanliness
  - Fast deposition of coating

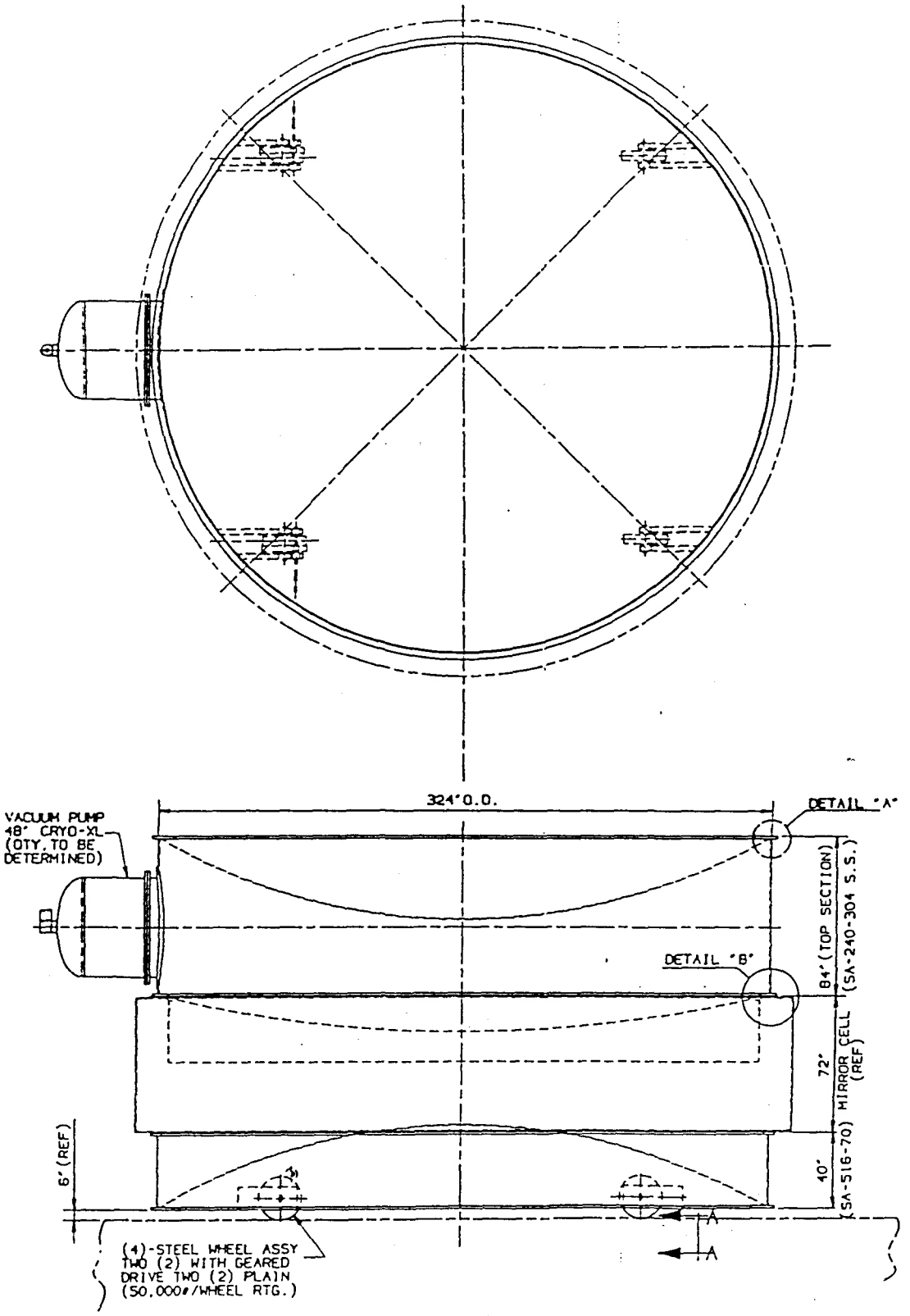

VACUUM CHAMBER ASSEMBLY

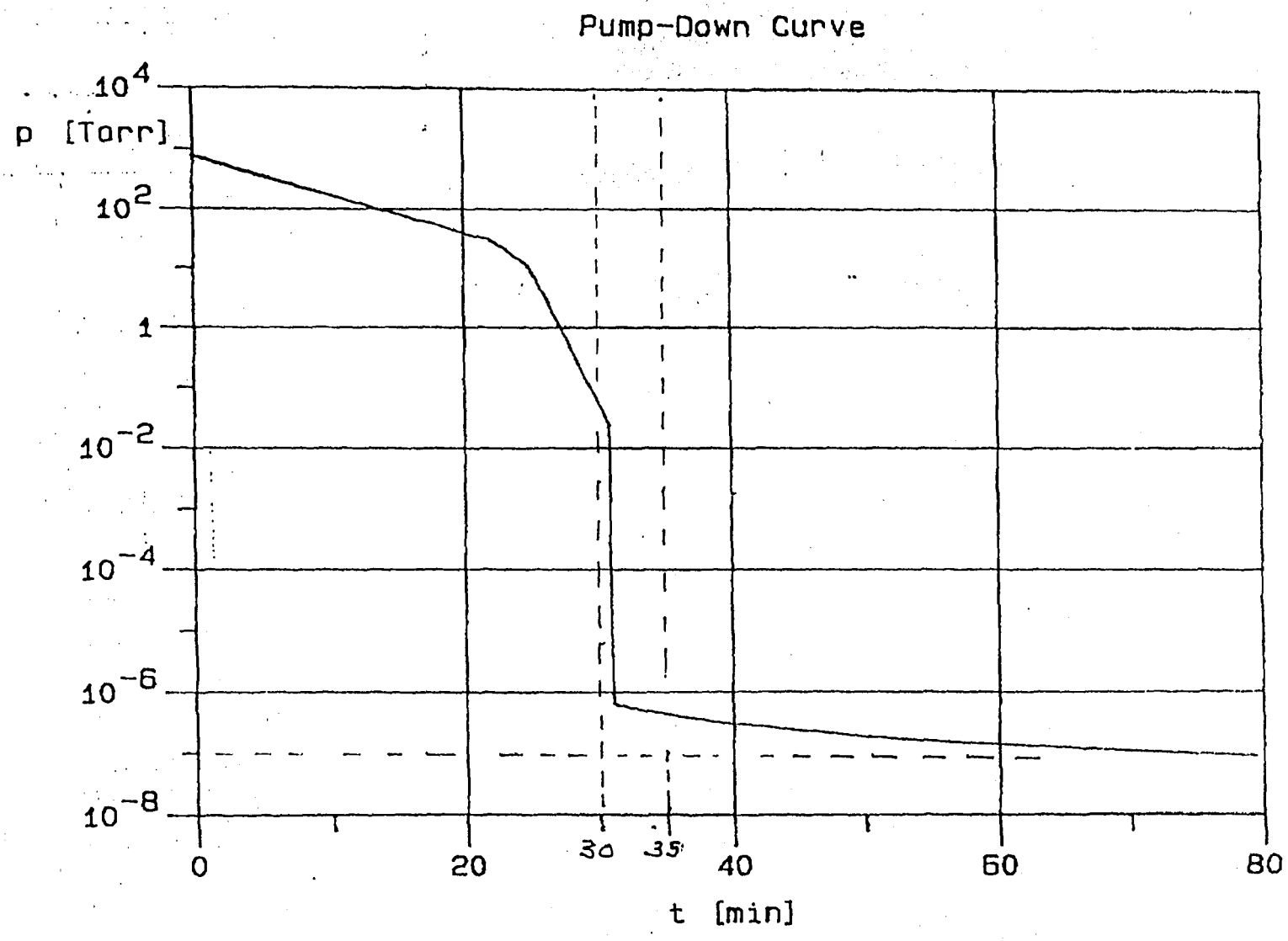

2*RPK60000+ 1*RA9001+ 1*RA3001+ 2*S630FII (60hz)
LEYBOLD VACUUM PRODUCTS Inc., Export, PA 21-NOV-1988 /JG/

VLT

Presentation by M. Grössl

OBJECTIVES:

- Maintaining High Optical Performance
  - specular reflectance
  - homogeneity
  - long term stability
- Safety
  - personnel
  - mirrors
- Reliability

REQUIREMENTS for PRIMARIES (TERTIARIES) exposed to dirty environment

- Broad Band Reflectance ($i < 10°$)
  $R \geq 86$ % from 300 nm to 20 μm
- Homogeneity
  better 0 / -1 %
- in situ optical performance control
- Coating Renewal
- in situ Cleaning
- Standard Coating: Aluminium
- Coating Options:
  - Improved Mechanical Stability
  - Improved Reflectance

REQUIREMENTS FOR OTHER MIRRORS placed in environment with contamination control

- Broad Band Reflectance
  R ≥ 96 % from 500 nm to 20 μm
  R ≥ 80 % from 300 nm to 500 nm
- Long Term Stability > 15 a
- Wear (abrasive) Resistant Surface

- in situ optical performance control

- in situ Cleaning

REQUIREMENTS

- Handling Concept
- Coating Renewal Procedure
  - Coating Removal
  - Mirror Cleaning
  - Coating
- Safety
- Reliability
- Telescope Down Time < 48 hours
- Consumables
- Investment

REQUIREMENTS
(Mirror Maintenance Building MMB 1.8 km for from telescopes)

- Procedures
  - Dismounting the Cell from telescope
  - Attachment of Coverage
  - Dismounting M3-Tower
  - Transfer Cell to MMB
  - Dismounting Mirror from Cell
  - Transfer Mirror to Coating Carrier
- Mirrors covered and horizontally face-up during all handling operations
- Handling Devices
  - redundant
  - self-aligning
  - force control for movements
- Reliability, Safety
- Duration: $\leq$ 10 hours
- Personnel Requ: 2(1) mechanician
  1 mech.operator
  1 controller

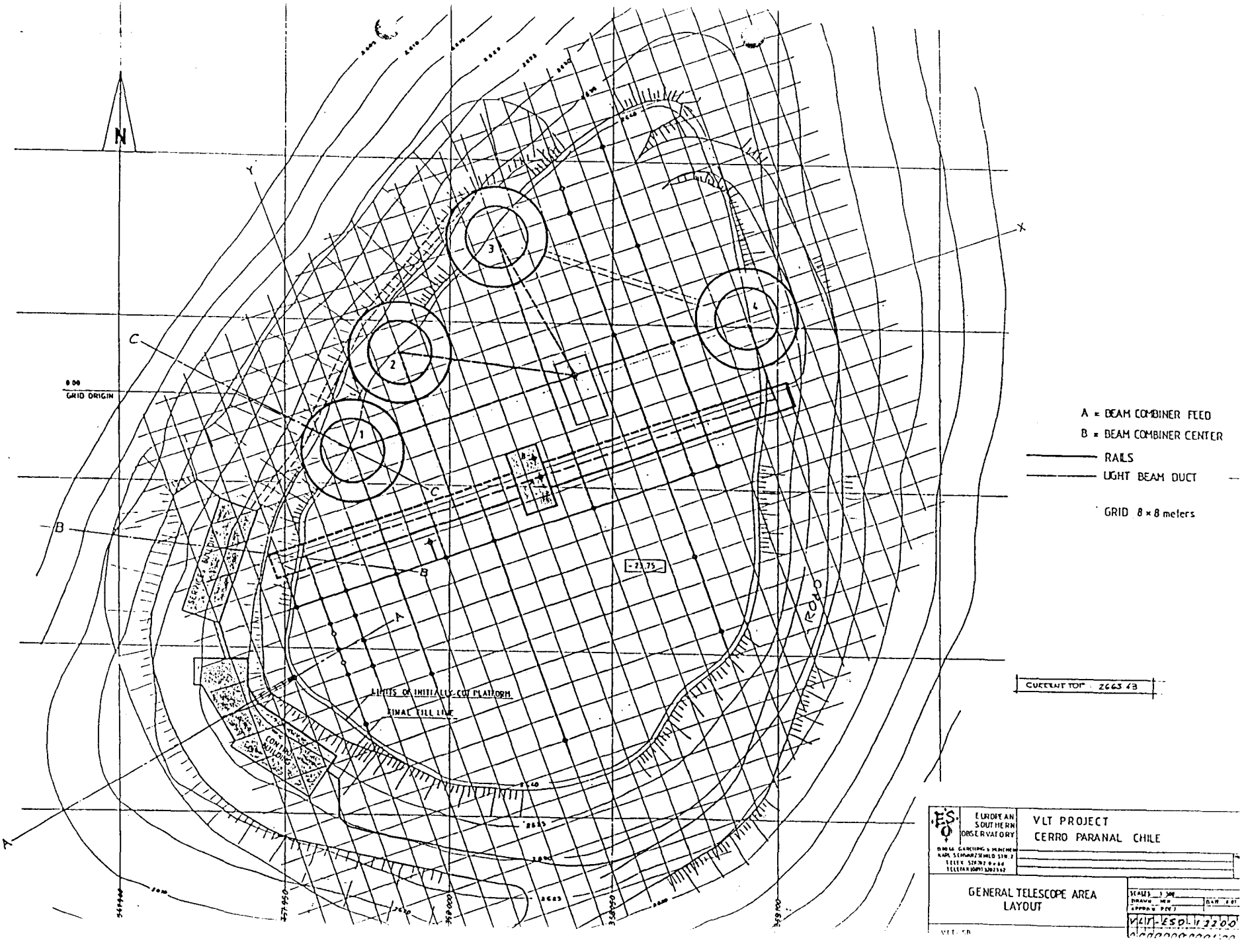
N
GRID ORIGIN
A = BEAM COMBINER FEED
B = BEAM COMBINER CENTER
RAILS
LIGHT BEAM DUCT
GRID 8 × 8 meters
CURRENT TOP 2663.43
LIMITS OF INITIALLY-CUT PLATFORM
FINAL FILL LINE
CONTROL BUILDING
EUROPEAN SOUTHERN OBSERVATORY
VLT PROJECT
CERRO PARANAL CHILE
GENERAL TELESCOPE AREA LAYOUT

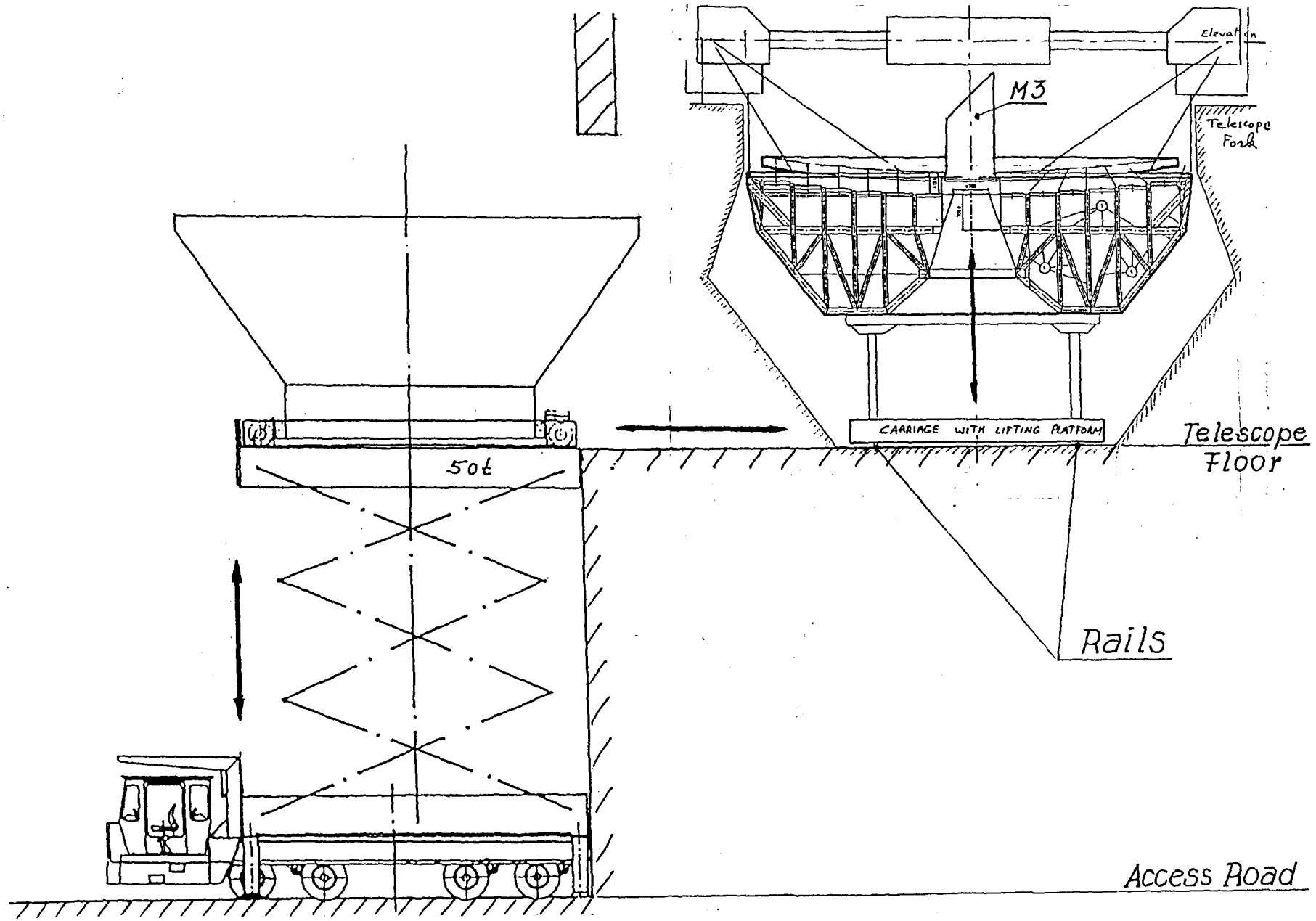
Elevation
M3
Telescope Fork
CARRIAGE WITH LIFTING PLATFORM
Telescope Floor
50t
Rails
Access Road

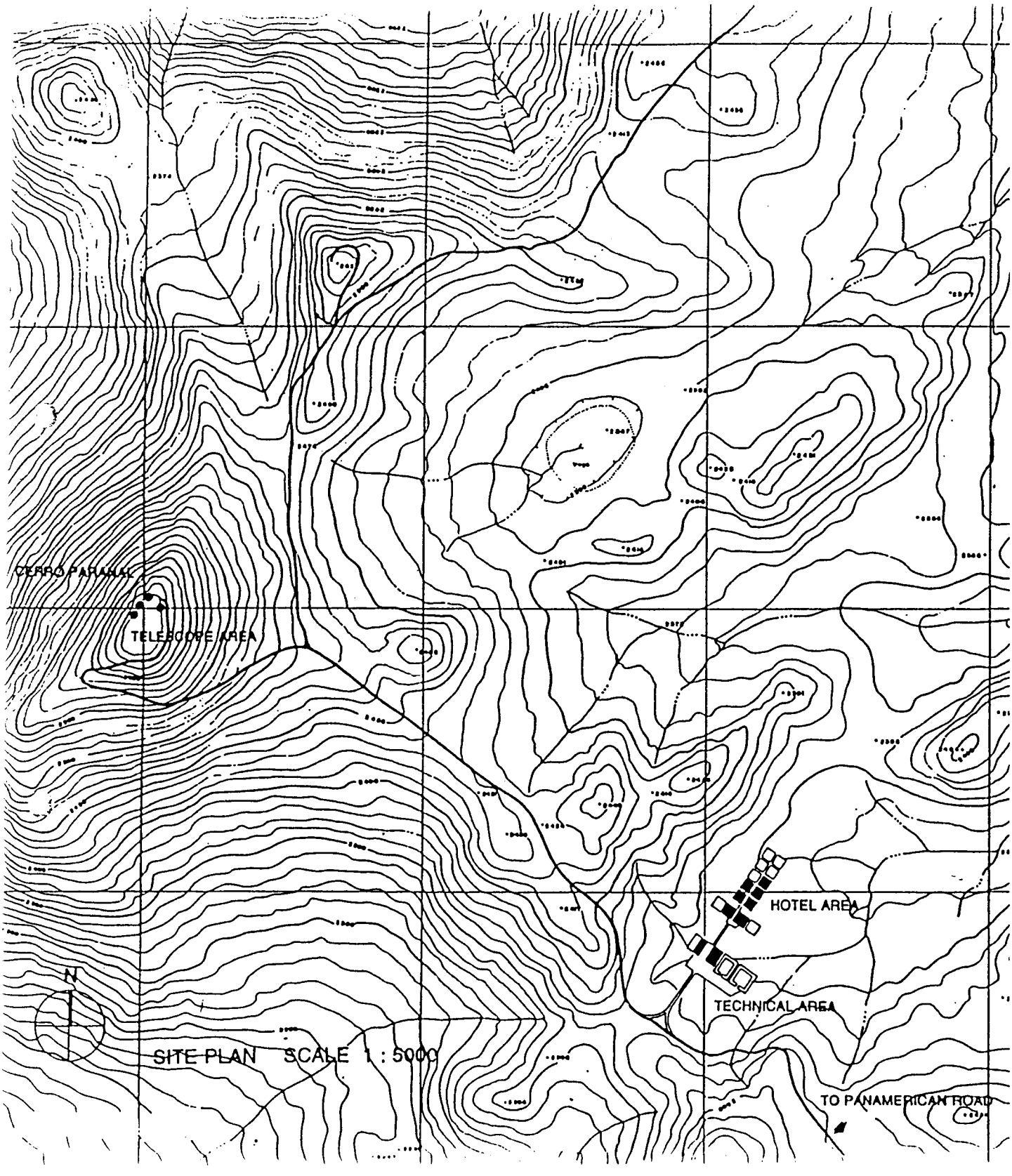
CERRO PARANAL
TELESCOPE AREA
HOTEL AREA
TECHNICAL AREA
TO PANAMERICAN ROAD
N
SITE PLAN SCALE 1 : 5000

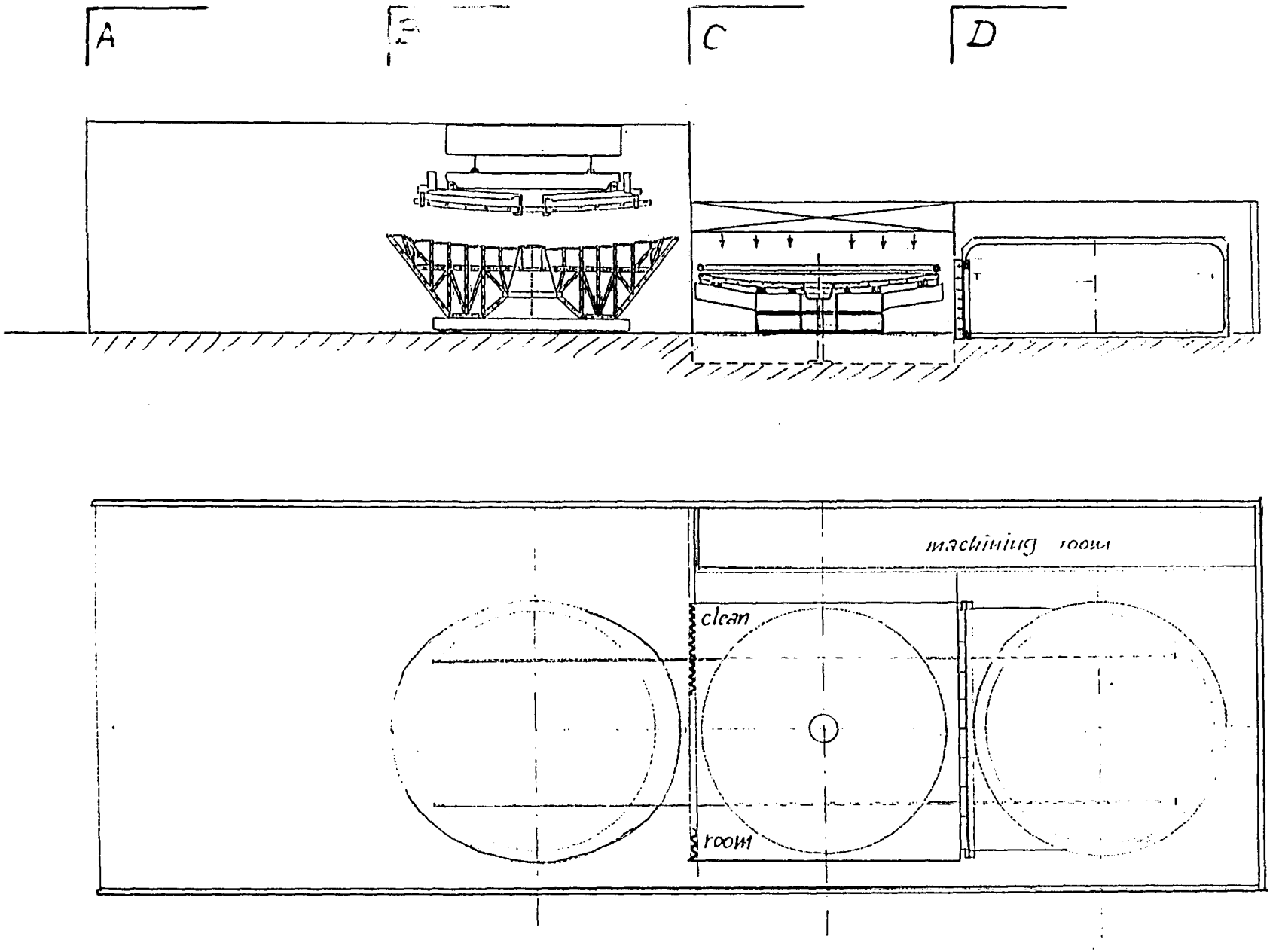

outline
mirror maintenance
building

OFF-cell procedure
ESO/GRM/11.90

Out-of-Cell Procedure: ADVANTAGES

- Simple single vacuum vessel
- minimum vessel volume
  ($\approx$ 80 m^3 for substrate + carrier)
- consequent high vacuum design of substrate carrier
- Simple long term storage
- high reliable vacuum quality and thus coating quality
- mirror washing on eye level
- No risk of chemical attack for the cell due to washing
- No vacuum requirements for M-Cell
- No delicate alignment and sealing procedure for the mirror

Out-of-Cell Proc: DISADVANTAGES

- Dismounting the mirrors out of cells
- Mirror handling from cell to carrier

DRAWER CONCEPT: Advantages

- Minimum Volume and vacuum exposed surface in loading section
- Simple Substrate Carrier integrated in vacuum vessel design
- All lubricated elements (wheels, drives, gears, damping elements) on atmospheric side
- Natural barrier against carry-in of dirt from floor
- No vacuum area safety risks for Personnel

DRAWER CONCEPT: Disadvantages

- Contamination risk during washing
- Prolonged air exposition for vac vessel
- Additional vertical movement for closing the coating chamber

VLT 8m Coating Unit
LOADING CONCEPT

- DRAWER CONCEPT

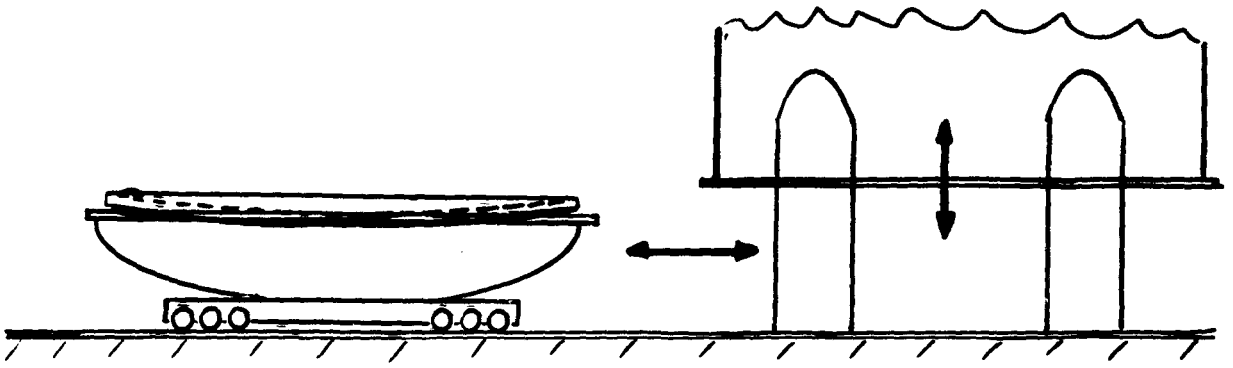

- Vacuum Bayonet

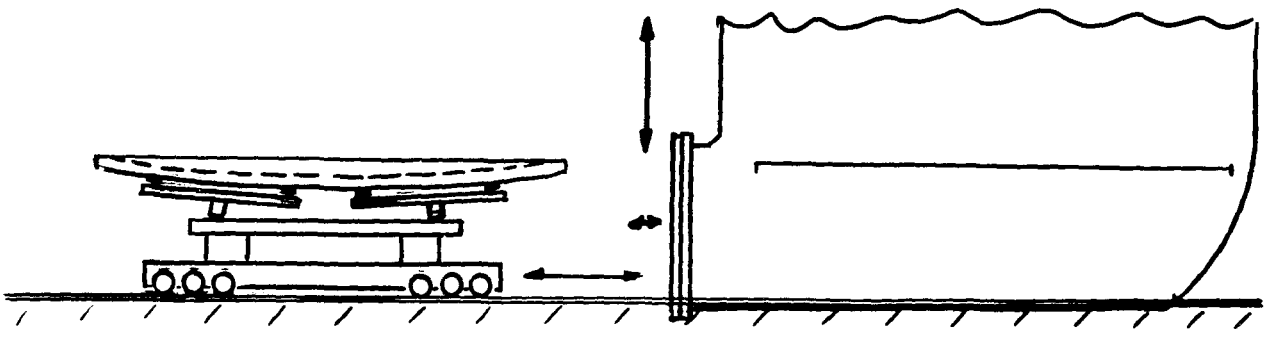

CONCEPT

- Cleaning rear and side surfaces
- Automated front side treatment
  - purging away dirt, dust, bird droppings, oil and grease
  - removal of old coating
  - chemical neutralizing
  - drying
- Particle contamination control
  - drying
  - mirror loading in coating plant
- Pre-cleaning prior to coating (in vacuo)

PROCEDURE

- Cleaning rear and side walls, lateral pads, axial tripods:
  - manually with alcohol
  - in lifting area
  - while M1 is hanging, prior to front side treatment
- Crane operation: Setting mirror on Coating Cart, removal of lifting tool and top cover
- Moving mirror into Washing Area (coating carrier on rails)
- Allow recovery of contamination control
- Attachment of Washing Unit (manual)
  - mirror hole plugged tightly by collecting tank
  - Spilling protection on outer mirror edge

PROCEDURE (cont'd)

- Machine process for Al-Coatings

- Soaking and large dirt removal:	o Tap water rinsing, (recycled)
- Dirt removal, (mechan./chem.)	o 3x detergent,50°C Jet spraying
- Detergent removal	o 2x Tap water rinse o 1x Tap water spraying
- Al - film removal	o 2x NaOH, 5% aqu. rinsing (recycled)
- Lie residues, O-layers removal	o 1x HCl, 5% aqu. + $CuSO_4$, rinsing
- Neutralizing $5.5 \leq pH_f \leq 6.5$	o 1x buffer (e.g. NH_4OH) o 3x H_2O dist.,rinse
- Drying	o 1x Ethanol, rinsing o 2x Ethanol >96%, rinsing, fresh o air draught support (sucking or blowing)

PROCEDURE (cont'd)

- Motor driven removal of Washing Unit
- Opening contamination control area and loading Coating Unit
- Down-pumping to 1×10^{-3} mbar
- Pre-cleaning by Glow Discharge in air ($\approx$ 0.02 mbar)

MECHANICAL WASHING UNIT: Advantages

- Minimum wear load on mirror
  - well controlled mechanical purging operation (spraying)
  - homogeneous permanent treatment of surface
  - minimum duration (chemical action)
  - no contact of surface with solids
- stainless drying
- minimum liquid consumption (recycling)
- minimum particle contamination
- safe handling of aggressive chemicals and vapours

NOTE: Process can be fully automatic if no Al droplets have to be removed!

MANAGEMENT PLAN

- Pilot Washing Unit (PWU) or ≤ 3.6 m mirrors: Requirements

▪ PWU Engineering, ▪ Manufacturing	external

- Process Development for Al Testing with 3.6m and NTT mirror
- Washing Unit for 8 m mirrors: Requirements

▪ WU Engineering, ▪ Manufacturing ▪ Installation in MMB	external

- Process Application and Tuning for VLT 8 m mirrors

CONTAMINATION CONTROL CONCEPT

- Washing in Clean Zone
- Clean Zone
  - completely separated from MMB
  - cleanroom class: $\leq$ 5000 per cf
  - air exchange rate according to HEPA filters (< MAK requirements)
  - gowning and filter masks (MAK) for personnel
  - starting procedure: complete cleaning and switch on ventilation 3 days in advance
- Proper interface design: Clean Zone / Coating Unit
- Finishing washing with minimum personnel present (automatic removal of Washing Unit, automatic loading)

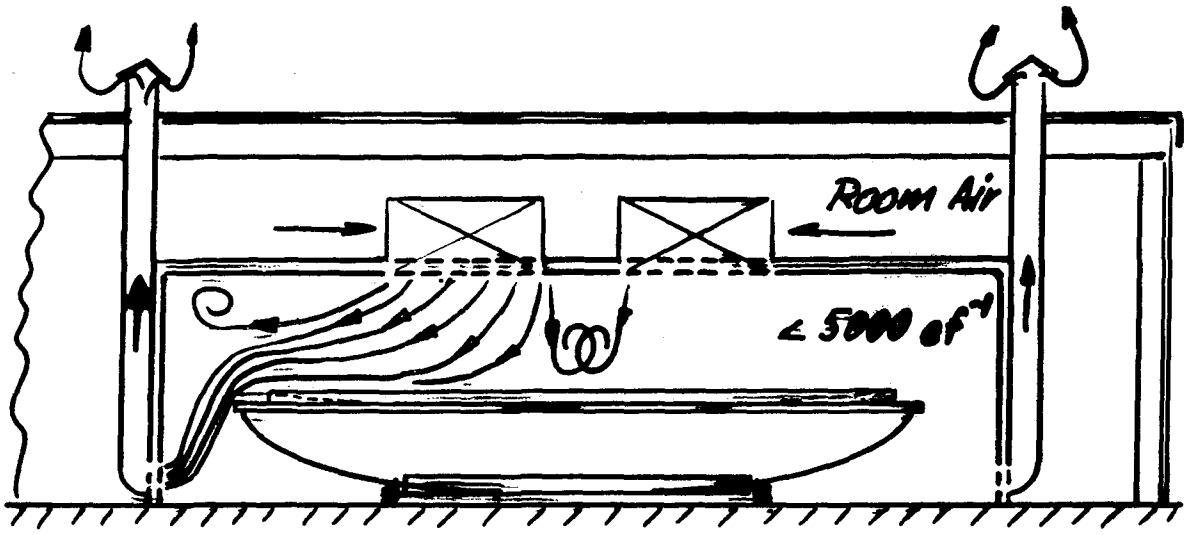

Crosssection Clean Zone

Mirror Maintenance Building

Opacity of Aluminium Vapour Deposits

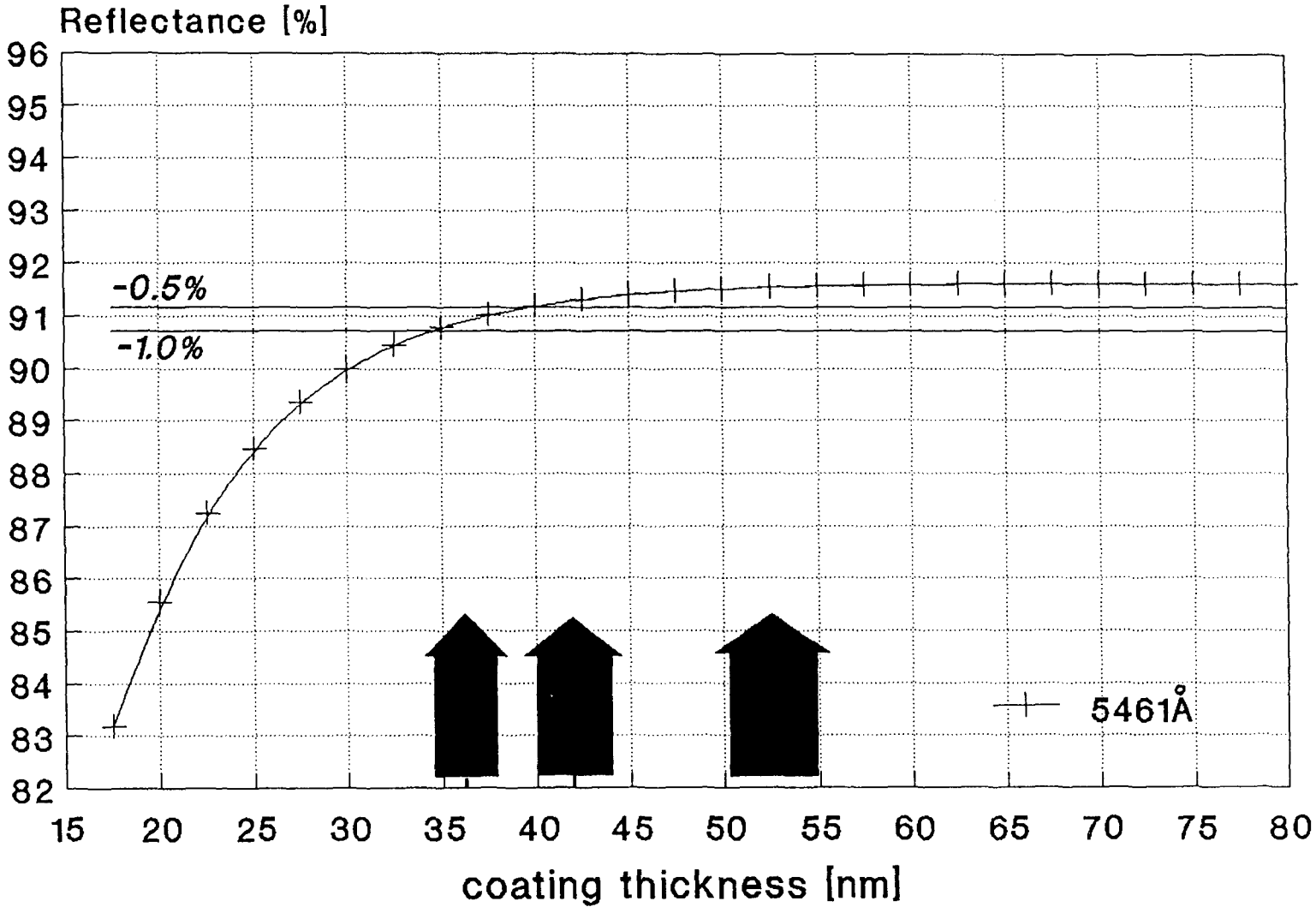

ESO/PGI/07.79
althick

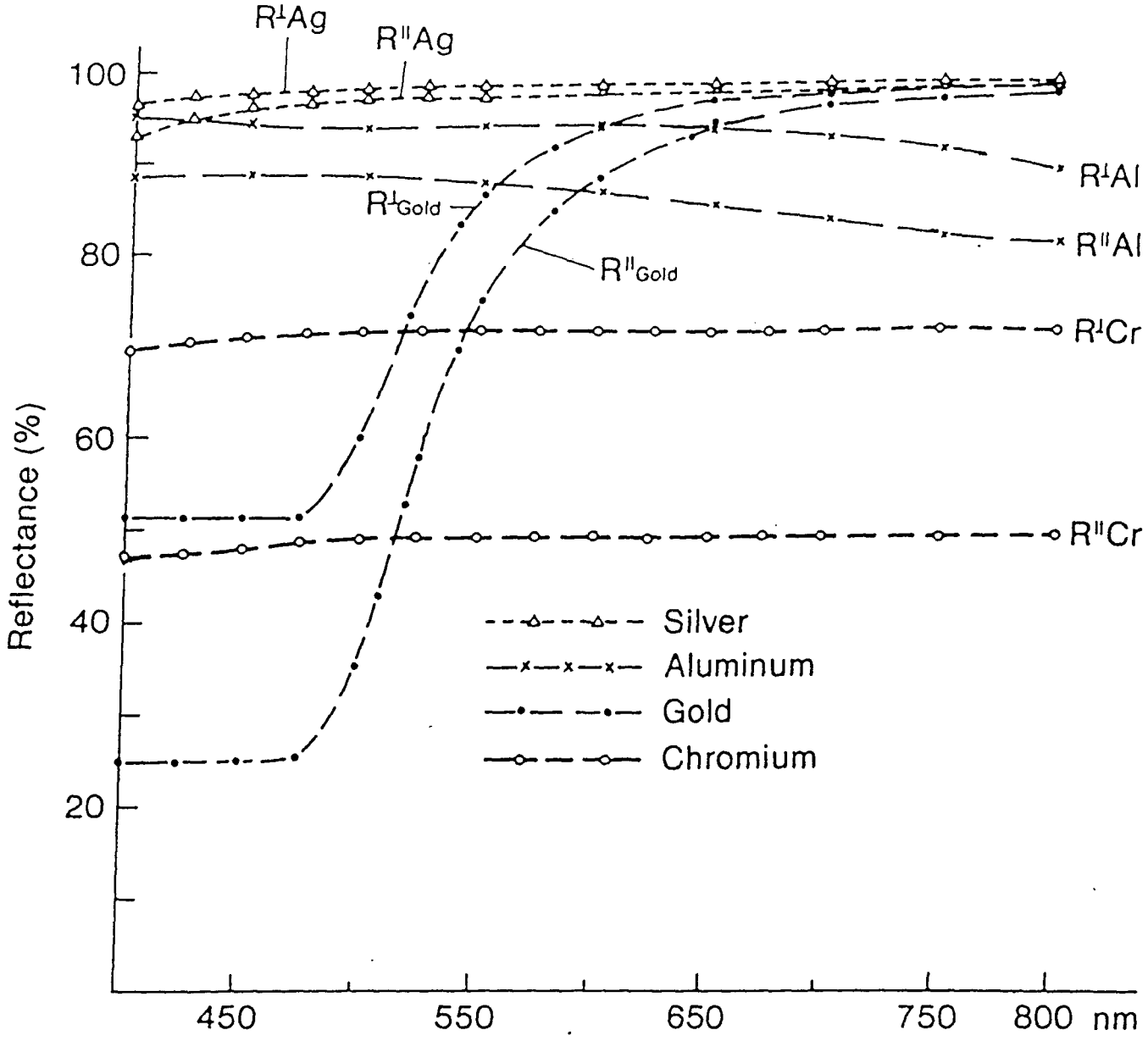

Fig. 26b

Spectral reflectance of opaque metal films at 45° incidence of linear polarized light. (Films produced and measured by Carl Zeiss, FRG).

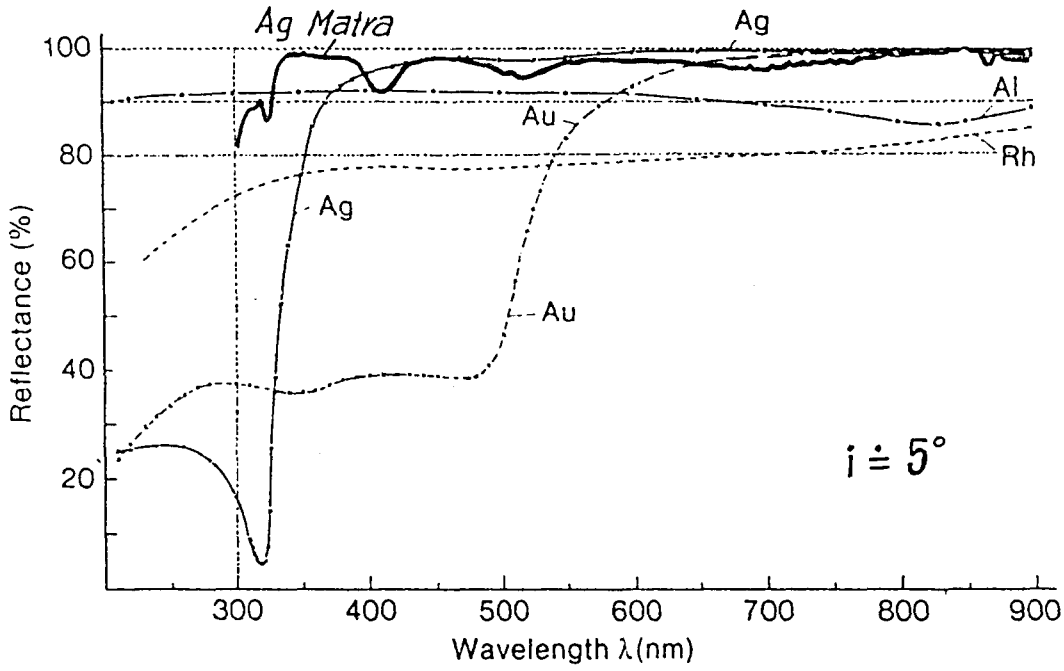

Spectral reflectance of various opaque metal films obtained at nearly normal incidence of the light beam. The films were deposited by evaporation in high vacuum. (according to Carl Zeiss, FRG).

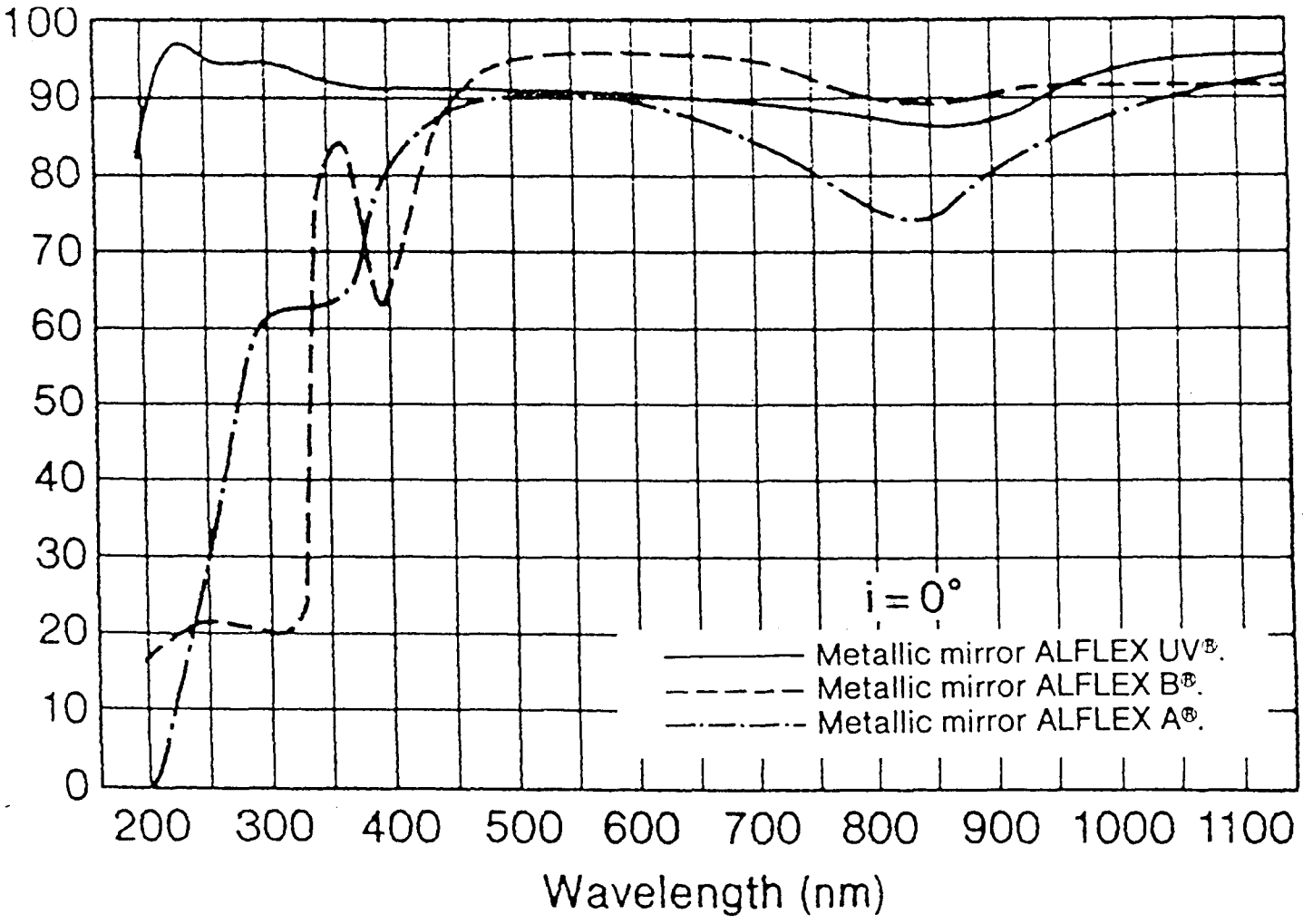

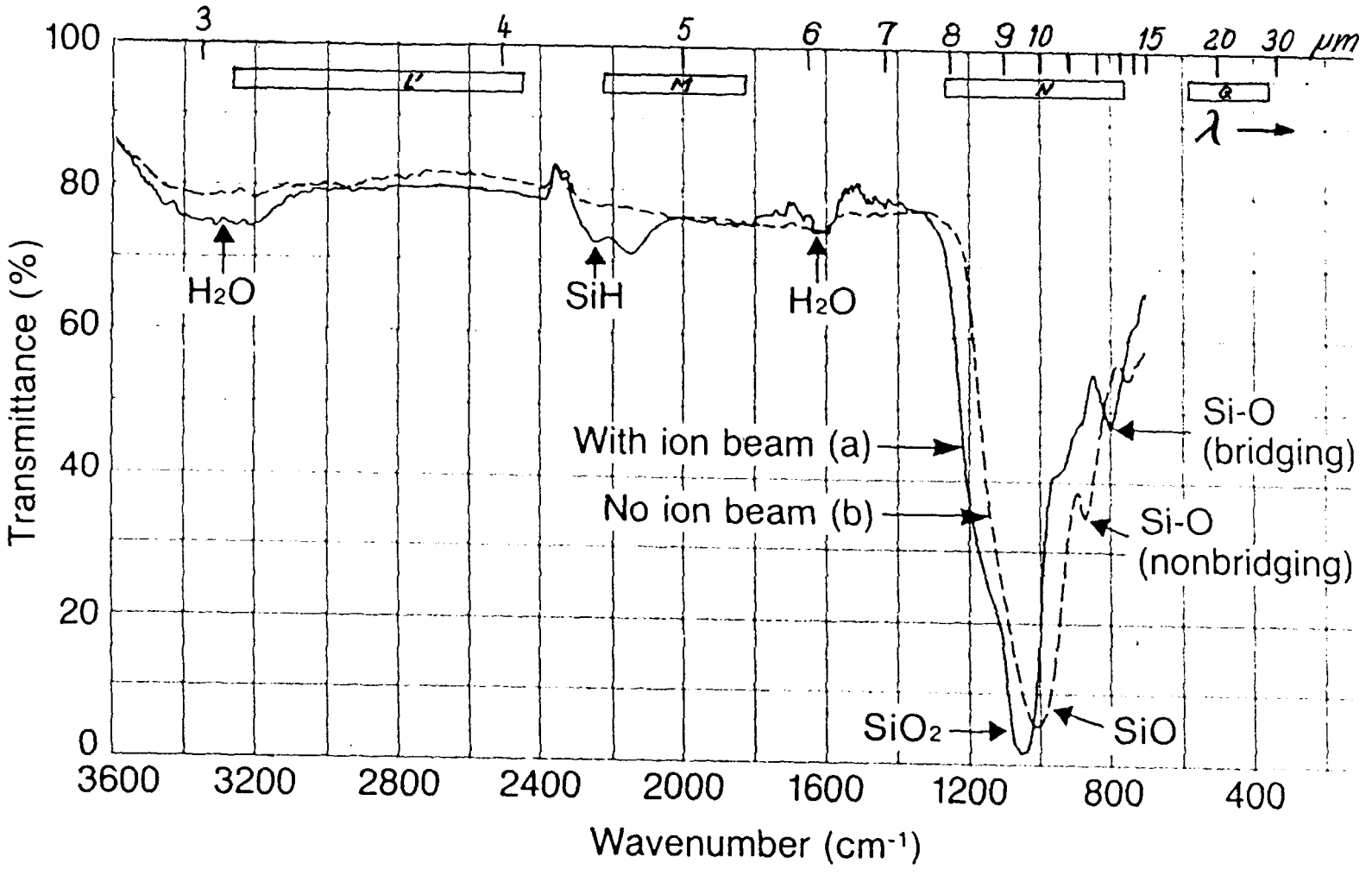

Fig. 5

Infrared absorption spectra of SiO_2 films deposited with (a) and without (b) activation (oxygen ion beam of 200 mA). The absorption spectrum of the latter film exhibit several absorption bands indicating an oxygen deficient film [40].

NEW COATINGS DEVELOPMENT PLAN

- Film layer design
- (small) Sample manufacturing
- Reflectance Measurement
- Adherence, wear test MIL 13508C (cheese-cloth rubbing)
- Removal Procedure Development
- Accelerated aging (80°C, 20%RH, 5 x 3 days)
- Film density Check (Pt/C replica)
- 1:1 Coating Process Development
- APPLICATION

VLT 8M-COATING UNIT

COATING TECHNOLOGY

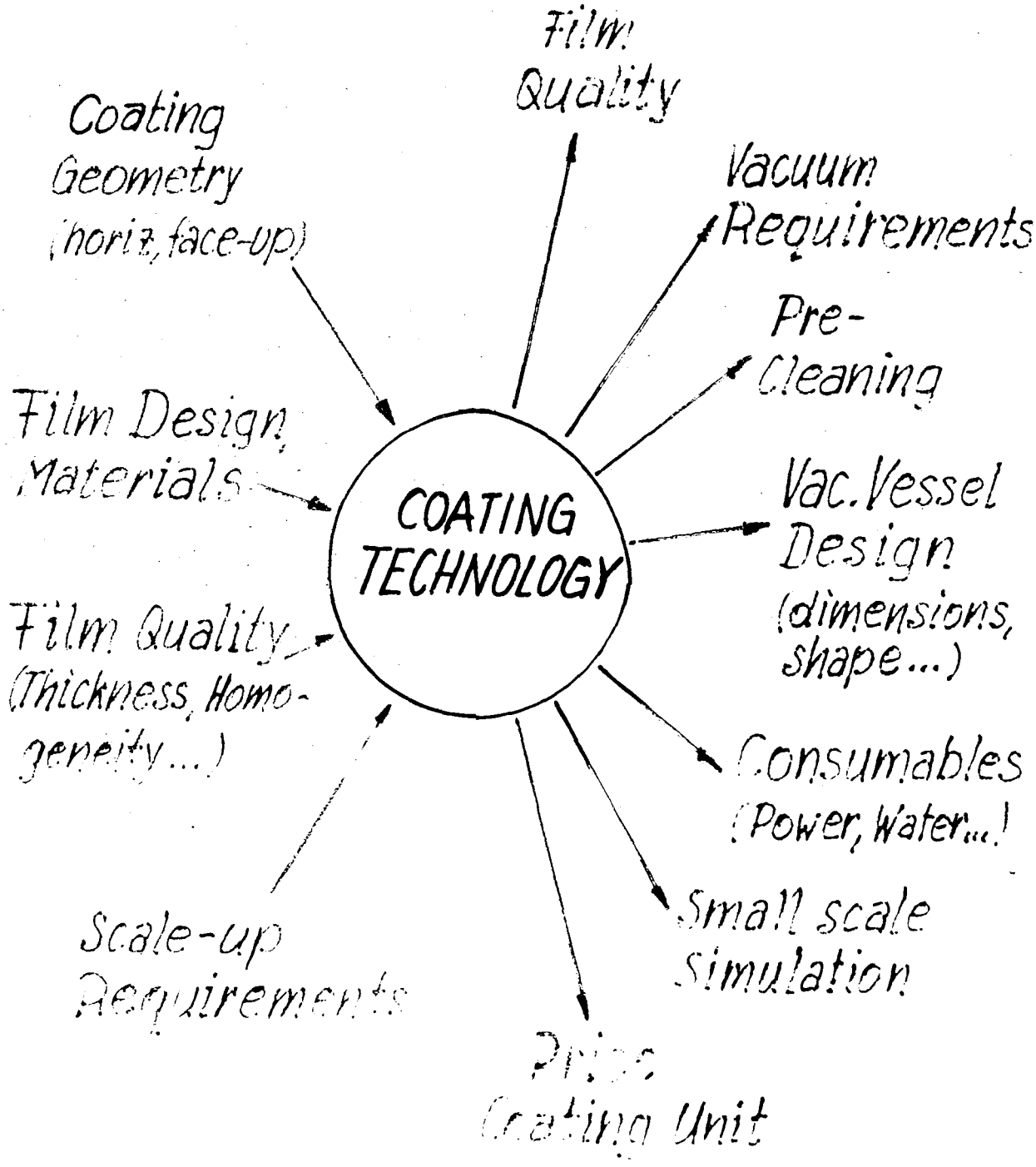

PVD TECHNIQUES used CURRENTLY on PRODUCTION SCALE for OPTICAL COATINGS

source type indicated	substrate conditions indicated
EVAPORATION	Ion Plating (IP)
Resistance heated	Activated *
Electron Beam heat	* DC, RF Bias *
Low Volt.Arc heat	* Reactive *
Hollow Cathode Arc	Reactive IP (RIP)
SPUTTERING	
DC magnetron sp.	
RF sputtering	
RF magnetron sp.	
Ion beam sp.	

Activated **R**eactive **E**vaporation
Biased ARE
High Rate Reactive Sputtering
DC/RF Bias Sputtering

COATING by EVAPORATION

- Emission characteristic of source type
  - coil (or basket) shape filaments
- Source arrangement after J.Strong
  - single source ring $D_{source} > D_{mirror}$
  - $D_s \geq 8.4$ m
  - $H \geq 4.2$ m above mirror surface
- Moderate filament load ($\approx$ 15 mg/cm) minimizing droplet formation
- El.Power Requ: $\approx$ 210 kW
  no. filaments: $\approx$ 400
- Vacuum vessel (coating partition):
  D x H $\approx$ 8.5 x 5.5 m
  Volume $\approx$ 300 to 340 m^3
  vac exposed metal surface $\approx$ 300 m^2
- Residual pressure: $< 2 \times 10^{-5}$ mbar
- In vacuo cleaning: Glow discharge

NOTE: Al alloys & wets; W stranded superior. No dielectric materials.

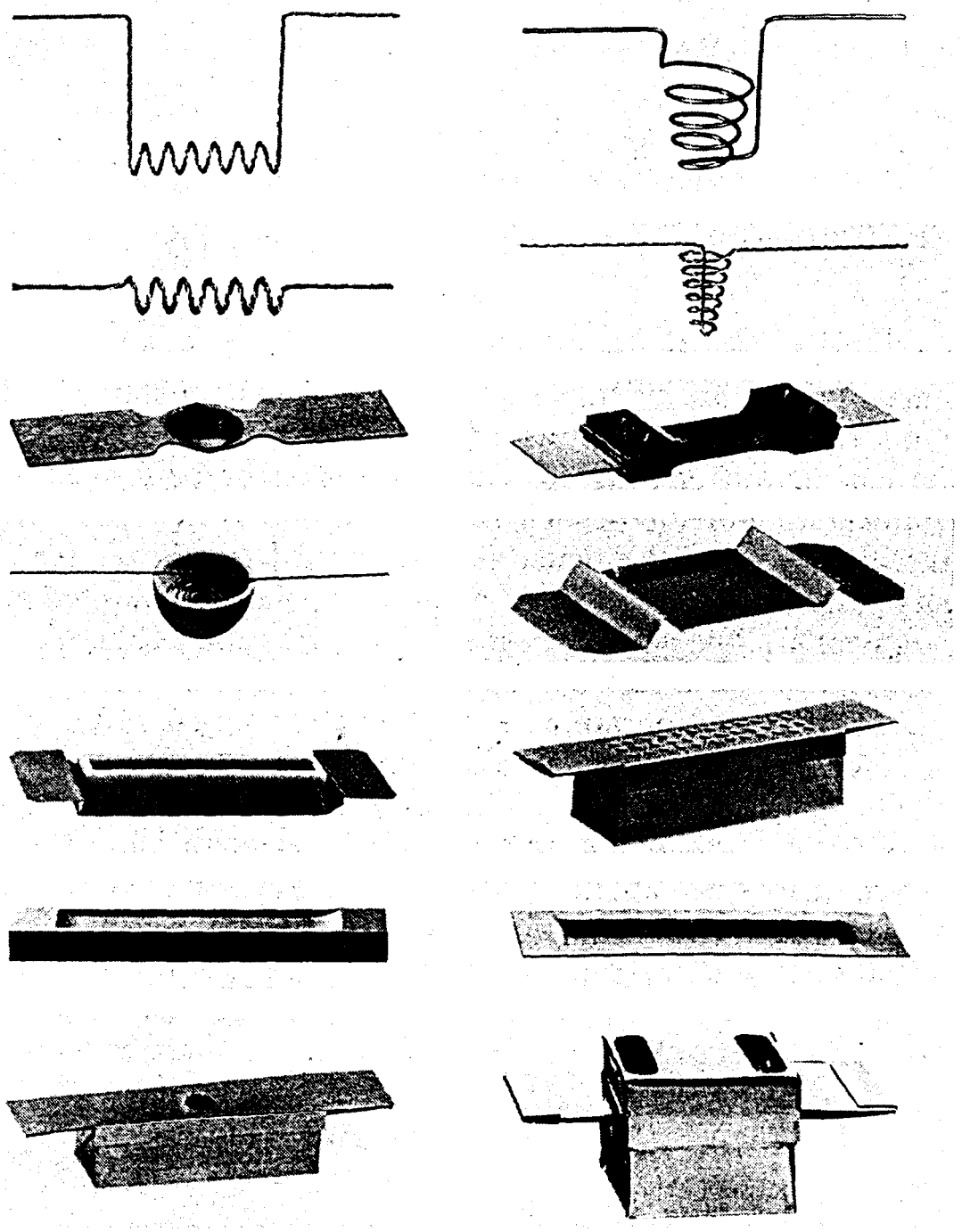

Fig. 53 a
Various types of resistance heated evaporation sources.

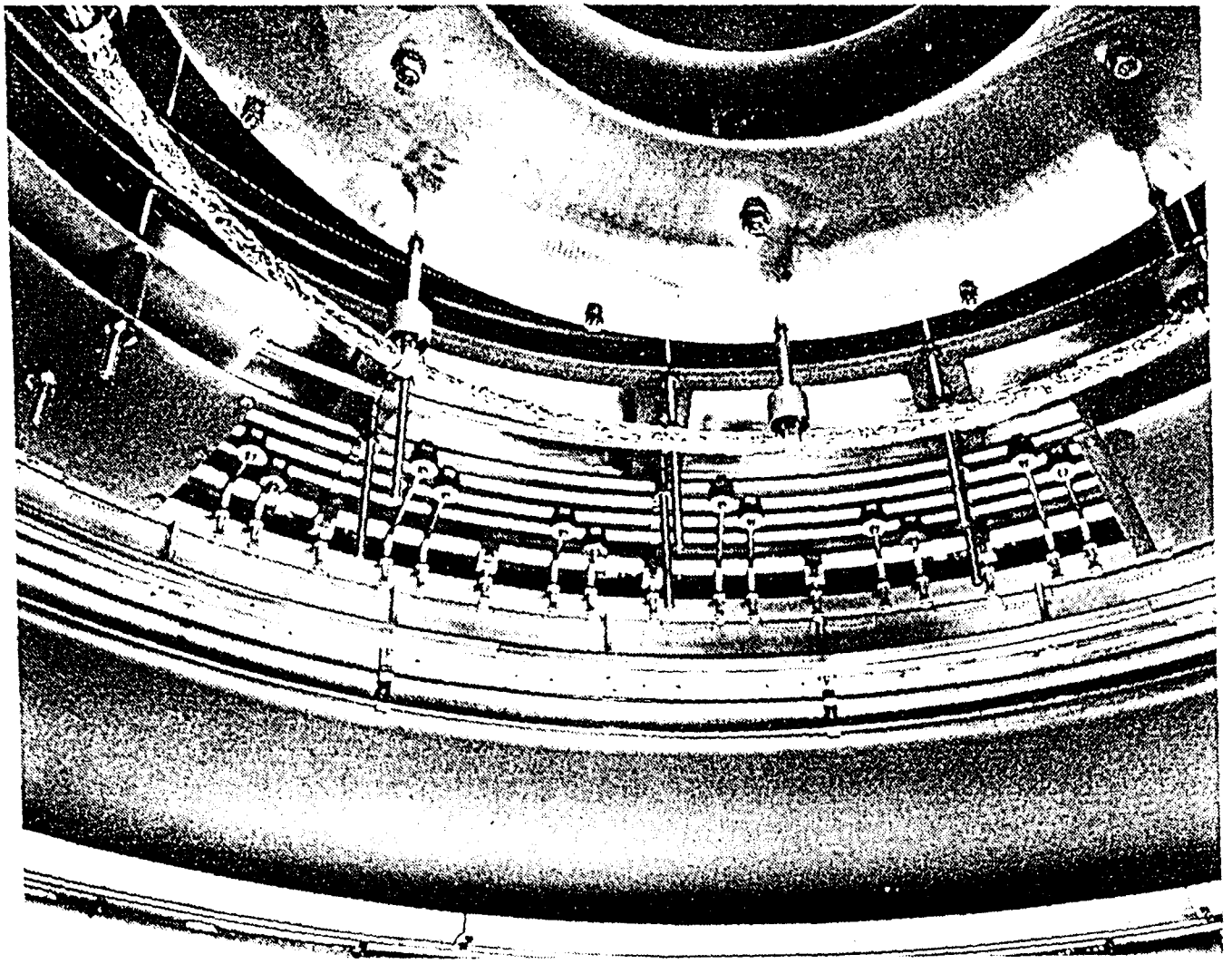

Fig. 61 b

Ring shaped glow discharge cathode and electrodes for the spiral shaped Al-evaporators mounted at the top of the metallizing plant.

Mirror Aluminium Coating
by ring evaporators on outer edge

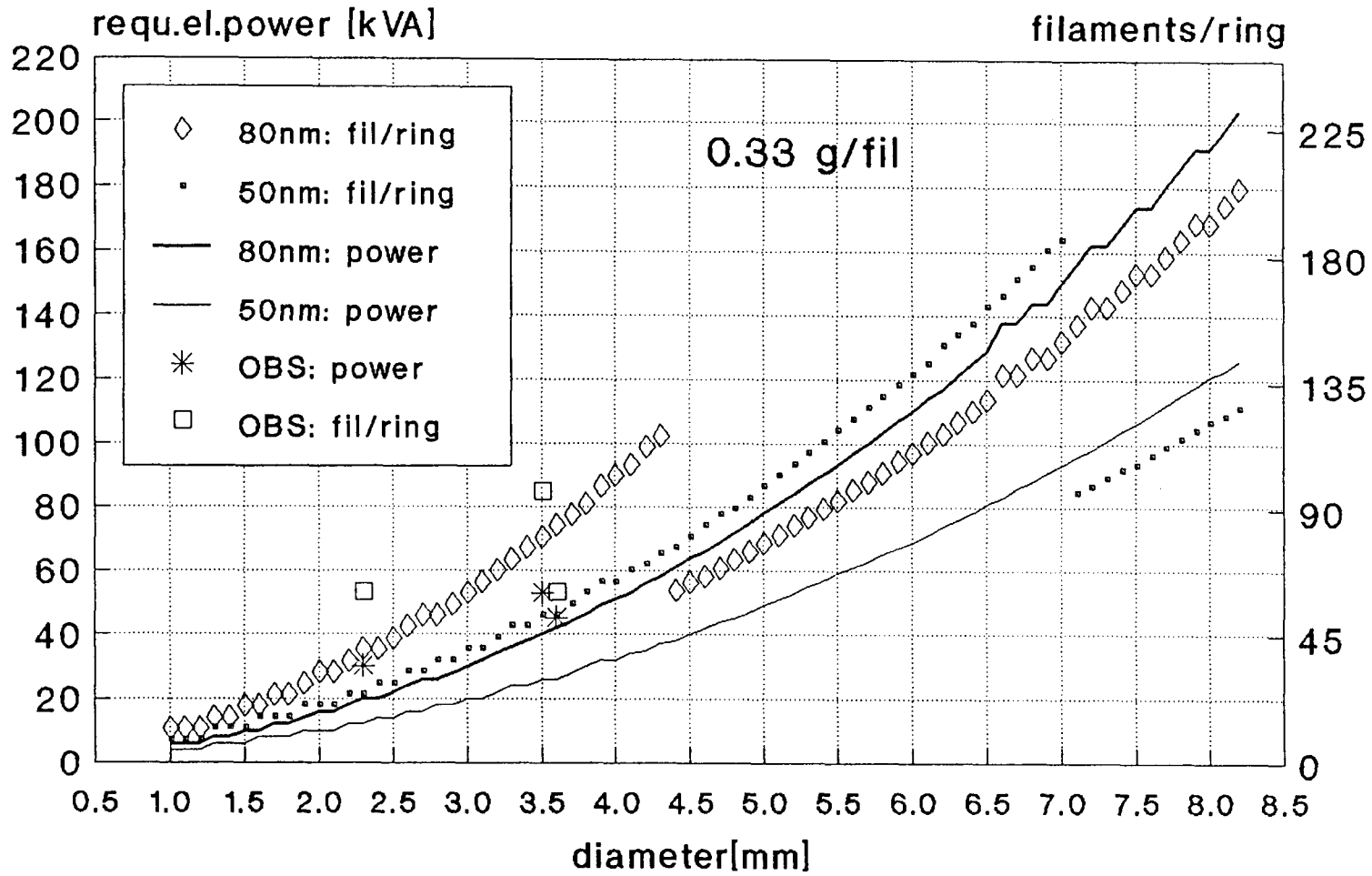

ESO/MGR/09.91
evgeom3

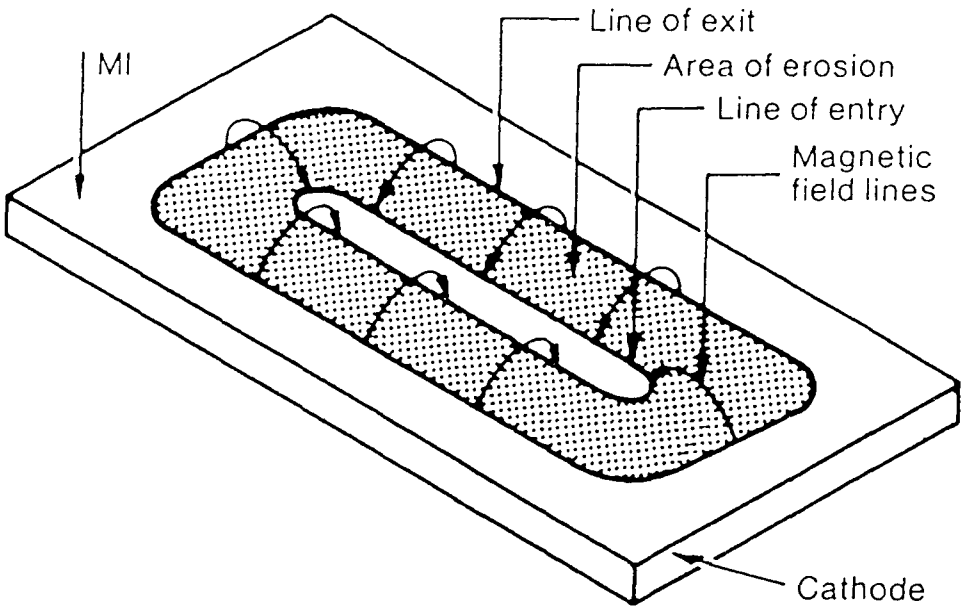

Magnetic field and electron path in a planar magnetron.

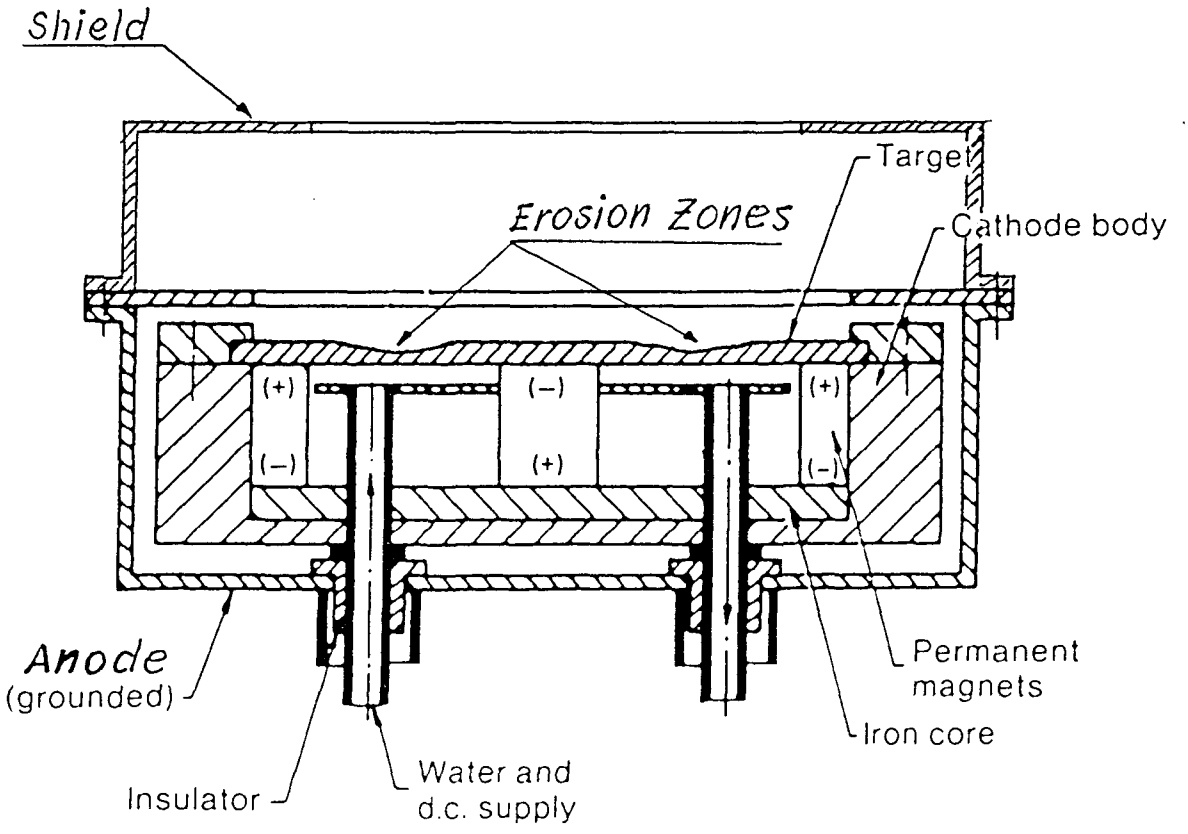

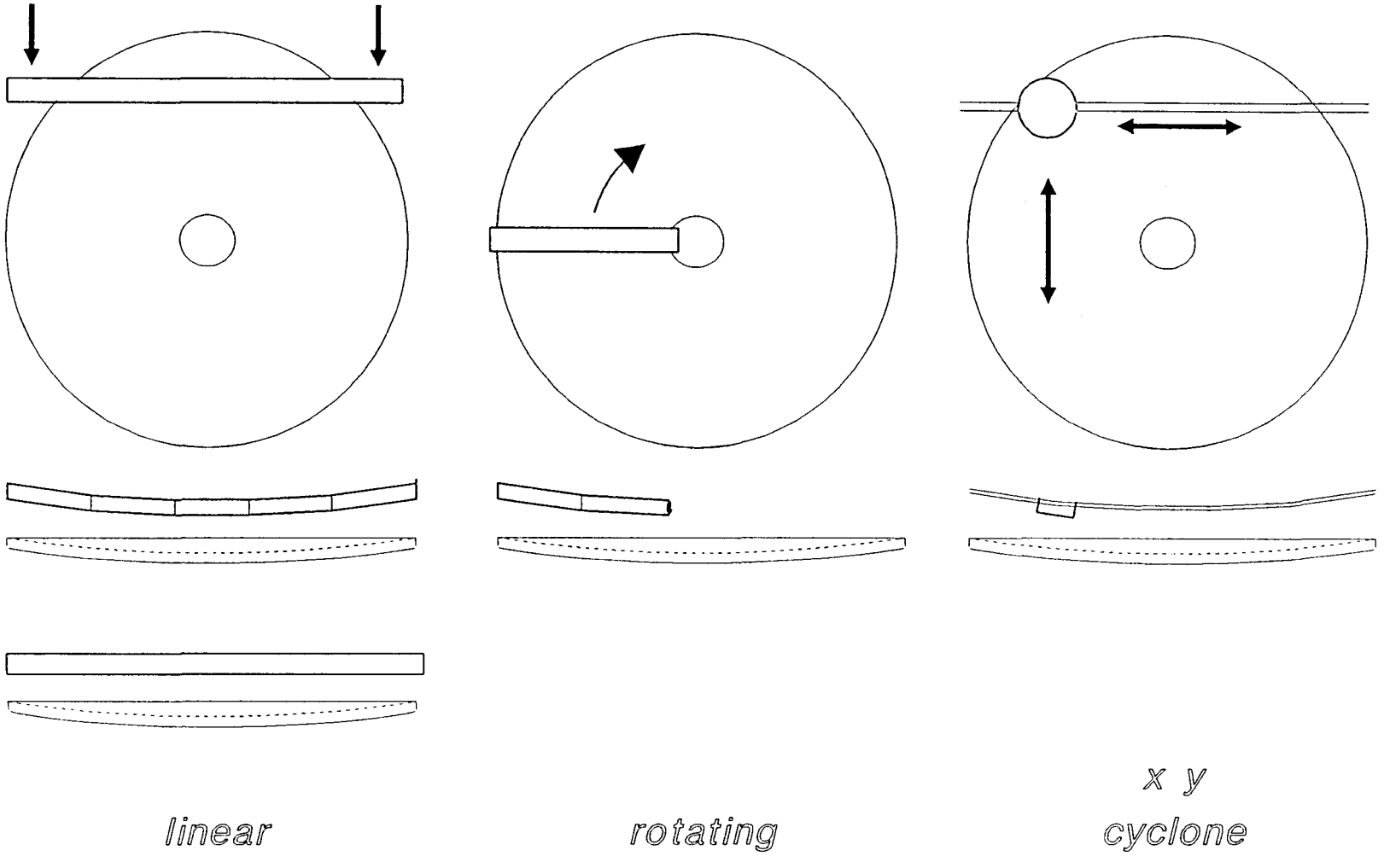

ESO/VLT/MGR/SPUTARR

RESIDUAL PRESSURE REQUIREMENTS

Common performance rule for optical coatings:

current density gas atoms Γ_G < 10 % current density of film material Γ_F

$$\frac{\Gamma_G}{\Gamma_F} = 4.37 \times 10^5 \frac{M_F \; p_G}{\delta_F \, r_D \, \sqrt{M_G \, T_G}}$$

δ_F.....film density [g/cm^3]
M_F.....molar mass of film [g/mol]
M_G.....molar mass of gas [g/mol]
p_G.....residual gas pressure [mbar]
T_G.....gas temperature [K]
r_D.....deposition rate [nm/s]

Example:

r_D = 10 nm/s, δ_F(Al) = 2.7 g/cm^3, Air 20 °C

Result: $p_G \leq 2 \times 10^{-5}$ mbar

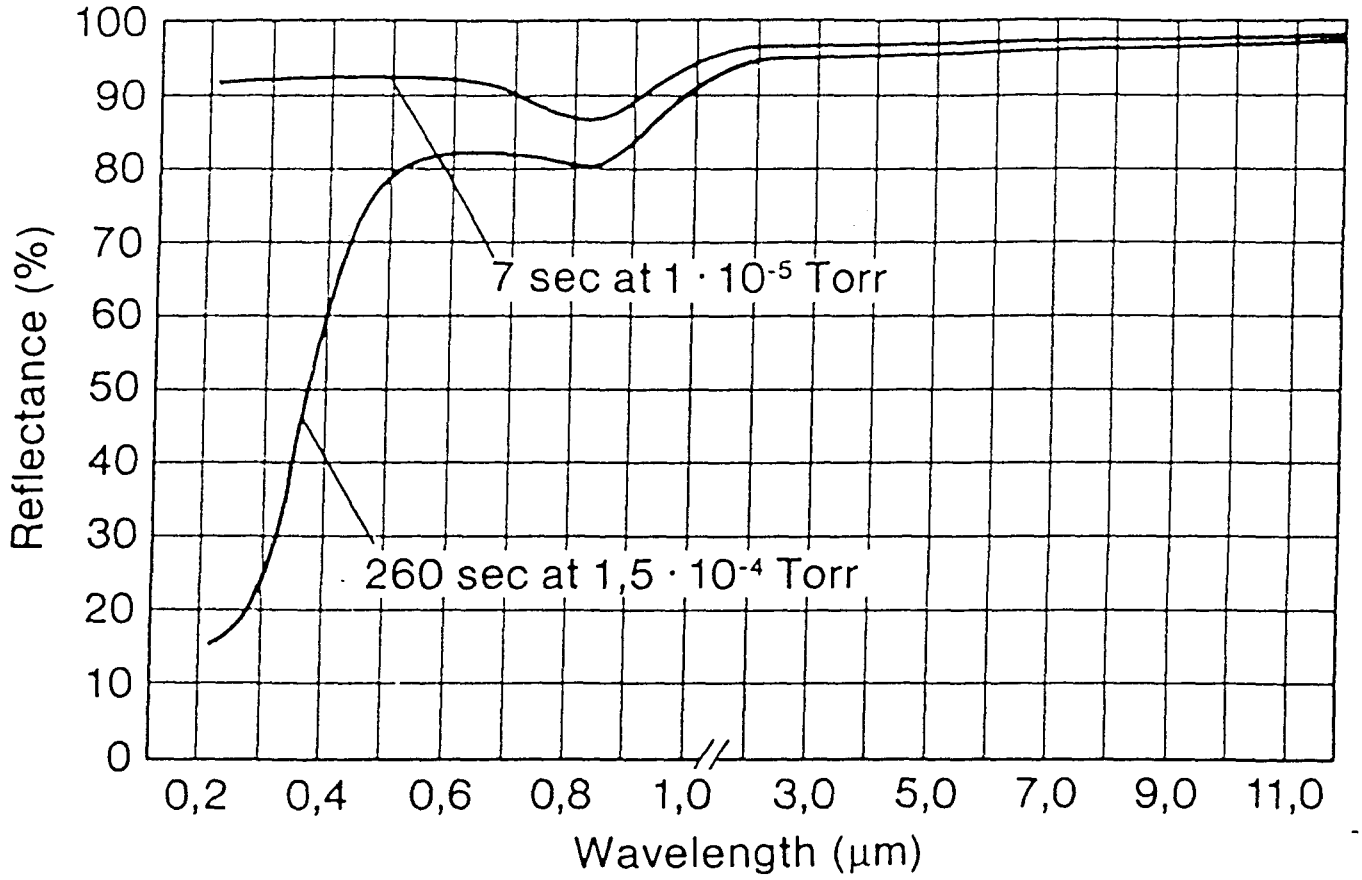

Fig. 11

Reflectance of two Al coatings prepared under extremely different evaporation conditions in the wavelength region from 0,22 to 11 microns.

SPUTTERING: Advantages

- Vacuum vessel height/volume small
  $H_{Ch\text{-}SPUT} \approx 2.5\ m \approx 1/2.7\ H_{Ch\text{-}EVAP}$
  $V_{Ch\text{-}SPUT} \approx 150\ m^3 \approx 1/2.7\ V_{Ch\text{-}EVAP}$
- Less foreline pumping capacity
- Low el.power requirement
  $P_{SPUT} \leq 1/2\ P_{EVAP}$
- Flexibility in film material
  Multi layer dielectric film stacks feasible
- No loading (high target lifetime)
- Reliable automatic process
- Excellent homogeneity (no droplets)
- Small scale simulation feasible
- Price (coating unit, transport, installations)

SPUTTERING: Disadvantages

- Water cooling systems required
- Periodic Cleaning of sources (surroundings)
- Moving parts in vacuum close to mirror surface required

PRECLEANING (in vacuo)

- By irradiation IR or UV
  - dedicated to substrate
  - dedicated to contamination
- By Glow Discharge
  - efficient
  - versatile
  - inexpensive

REQUIREMENTS

- Residual pressure: ... $\leq$ 2 x 10^{-5} mbar
- Working pressure (sputtering): ..... $\approx$ 2 x 10^{-3} mbar
- Pumping Duration: ... $\leq$ 4 hours
- Reliability (oil backstreaming)

SOLUTIONS

- Roughing with roots blower + rotary vane pump to $\geq$ 0.08 mbar
- High vacuum pumping with High Vac Pump + Meissner Trap:
  - Bath-cryo pump
  - Diffusion pump with LN2 Baffle (Silicon Oil DC 704)
  - (- Refrigerator cryo pump)

  - Throttle position for Sputtering

CONSUMABLES (preliminary)

	SPUTTERING	EVAPORATION
■ Electrical power		
- Foreline pumps	65	125 kW
idle (low p)	45	90 kW
- Diffusion pumps	100	100 kW
- Bath-Cryo pumps	0	0 kW
■ Cooling Water		
- DIF System	125	130 l/min
- CRYO System	5	10 l/min
■ LN2 / 8 hour batch		
- Pumps/Baffles	600	600 l
- Meissner Trap	1500	2000 l
■ LHe / 8 hour batch		
- CRYO	40(?)	40(?) l

(first charging not included)

MANAGEMENT PLAN

- Requirements 8m Coating Unit (loading concept, film requ., film quality, [coating technology], power requ., pumping system, precleaning)

- Engineering
- Design
- Manufacturing
- Process Developmnt
- EU Perform. test
- Transport on site
- Weight load tests, witness tests
- Acceptance test with mirror

FEA
Substr.Carrier

FEA
Vac Vessel

- Development alternative films

PLANNINGS

- Activities prior to production
  - starting clean zone
  - 1 test run with witness plates
- Quality Control during production
  - film thickness check (witness)
  - adhesion tape test (at the edge)
  - reflectance measurement (in situ)
  - monitoring selected parameters of sequences for washing and coating
  - final visual observation (dark field ilumination)
- Maintenance plan
  - weight load tests
  - cleaning coating equipment

Discussions on Topics for Future Observatories

Mirror Handling for Re-coating	*S. Prat*
Coating and Coating Equipment	*K. Raybould*
Cleaning Mirrors in situ the Telescopes	*P. Giordano*

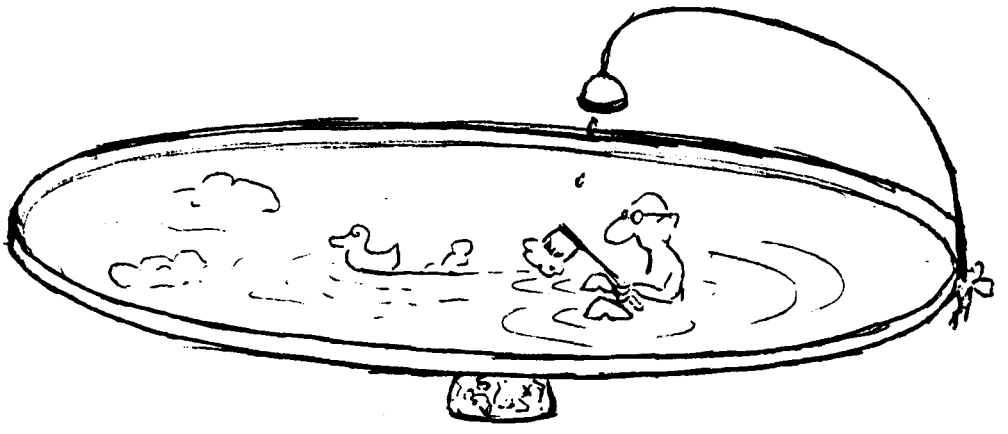

Mirror Handling for Re-coating

Presentation by S. Prat

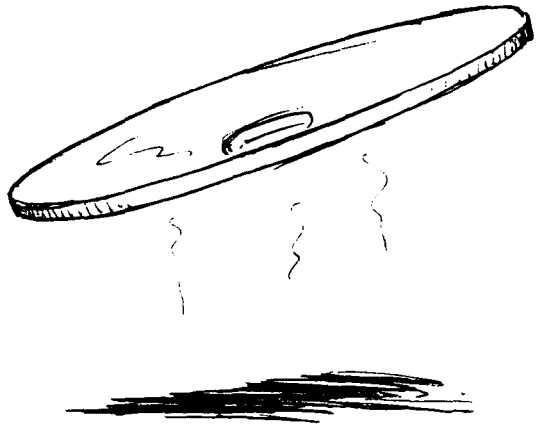

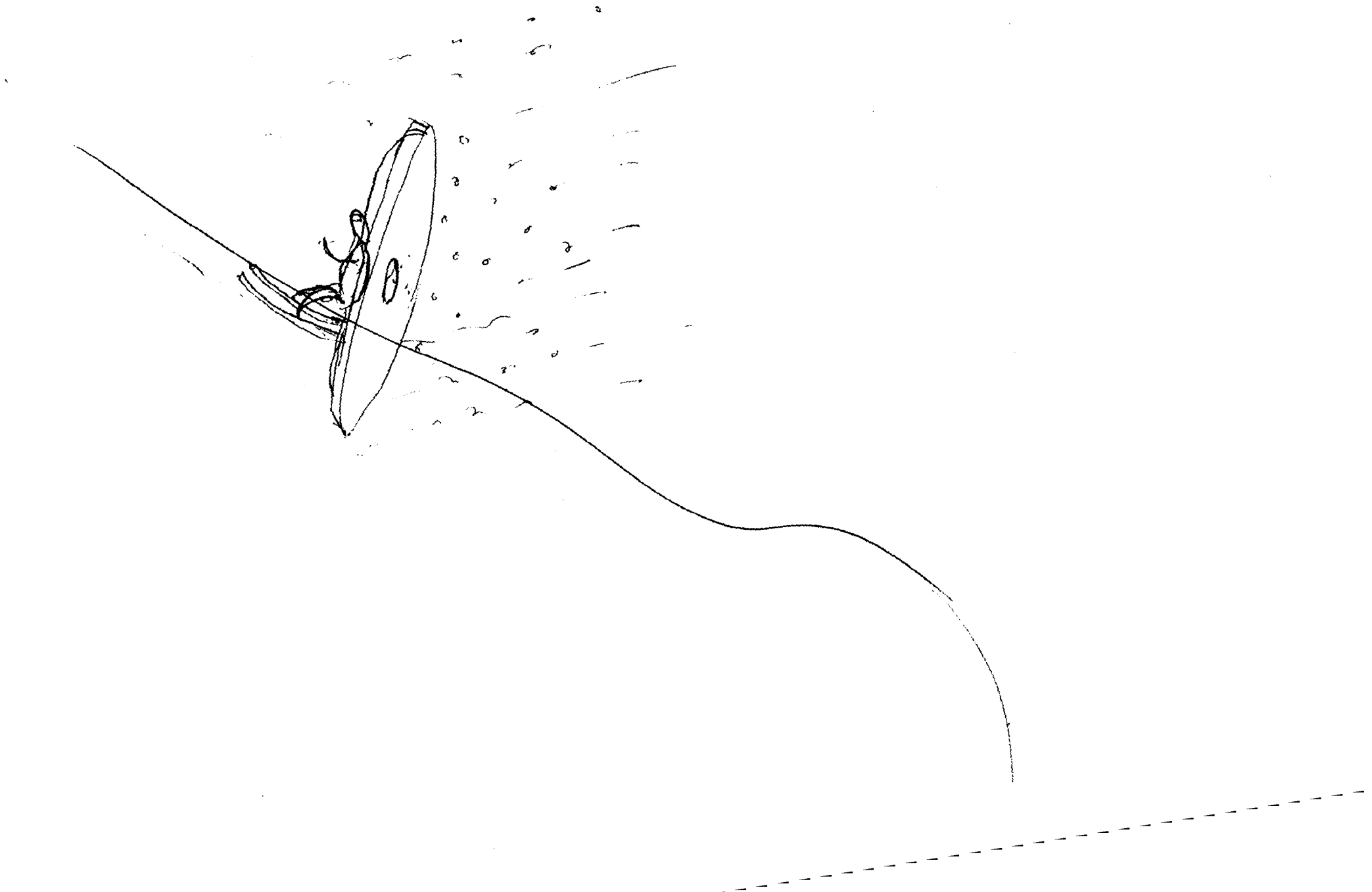

VLT site lay-out

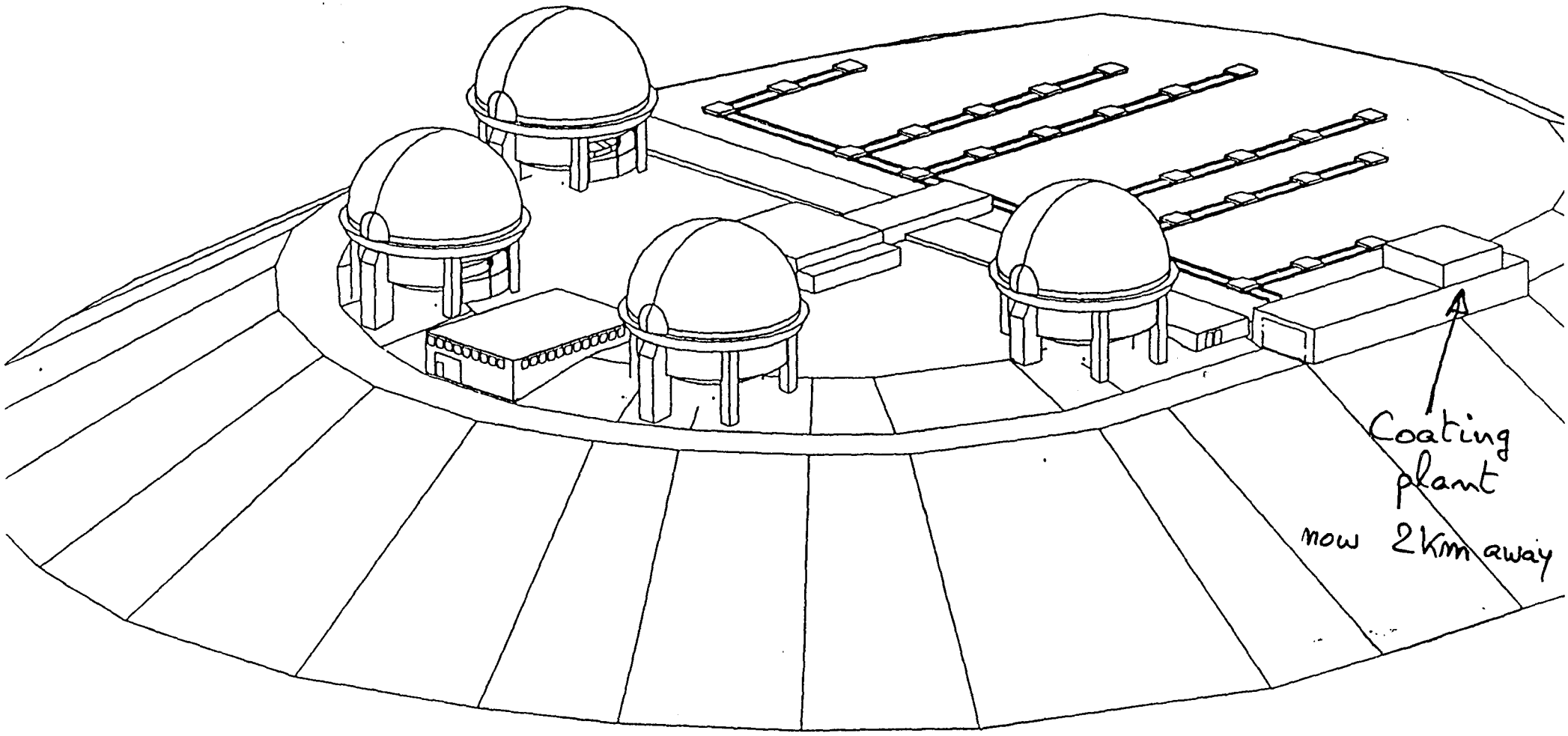

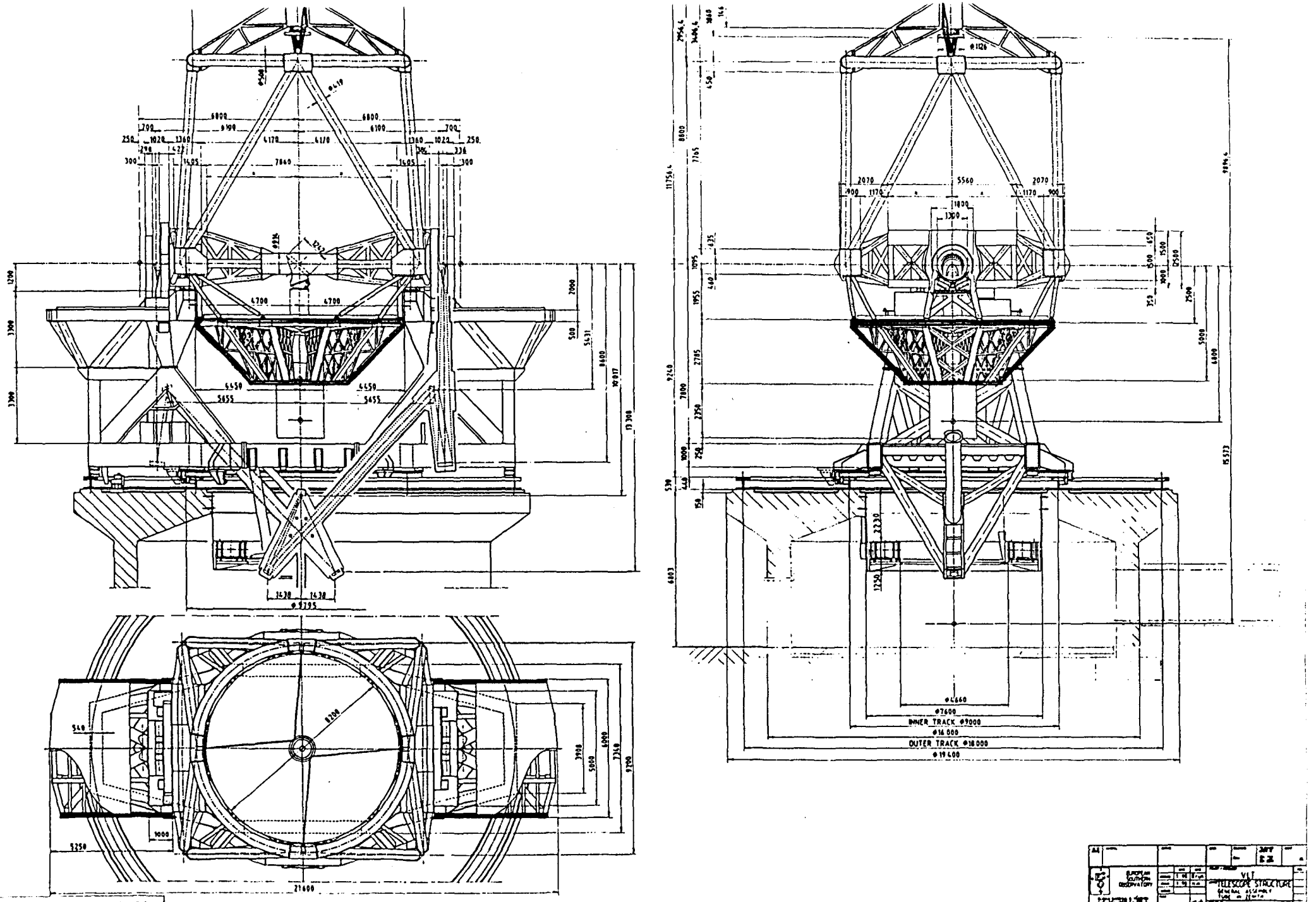
INNER TRACK ⌀9000
OUTER TRACK ⌀16000
⌀19400
⌀21600
VLT
TELESCOPE STRUCTURE
GENERAL ASSEMBLY
T 140 000 01 M0/C

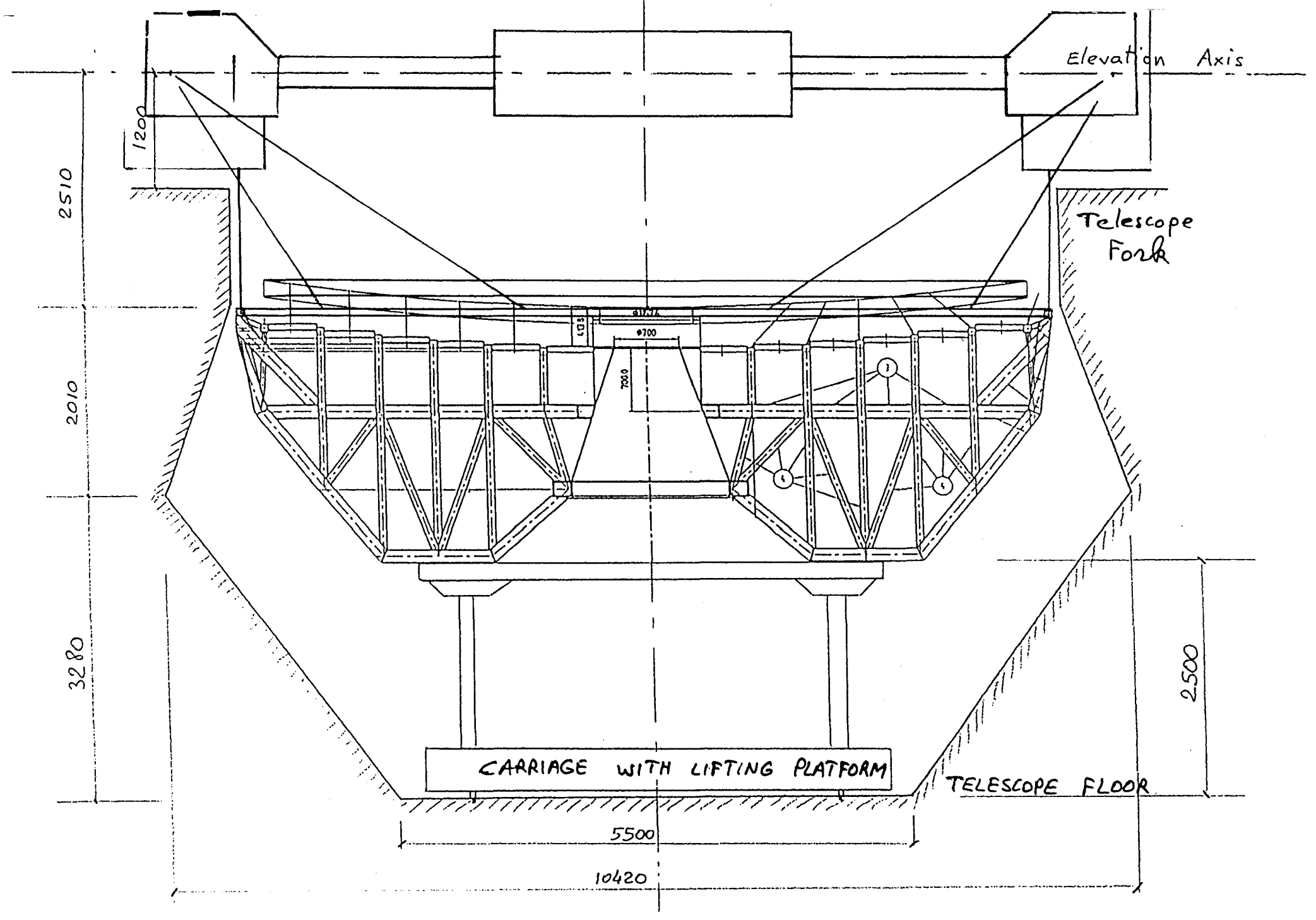
Elevation Axis
Telescope Fork
1200
2510
2010
3280
2500
φ700
700.0
CARRIAGE WITH LIFTING PLATFORM
TELESCOPE FLOOR
5500
10420

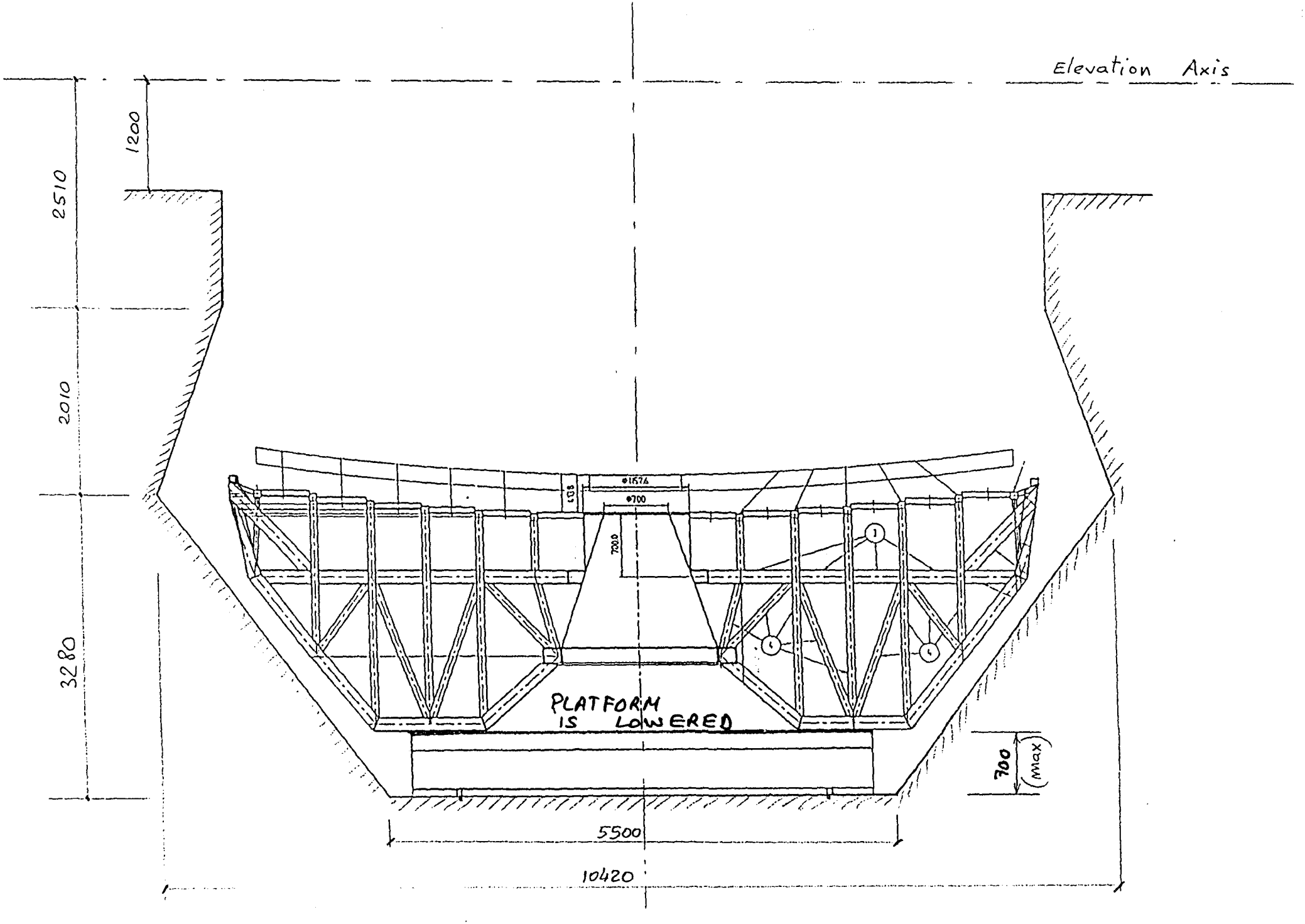
Elevation Axis
1200
2510
2010
3280
⌀1676
⌀700
7000
PLATFORM
IS LOWERED
700
(max)
5500
10420

ELEVATOR / TRANSPORTER INQUIRY

1. **OBJECT:** M1 Unit

mass 40 TONS
h 3.3 m
top ϕ 9 m bottom ϕ 5.5 m

Carriage

mass 8 TONS
h 0.7 m 5 m x 8 m
- steel wheels on rails
- with lifting platform
- self propelled

2. **STATION 1:**
- 4 x telescope buildings
- h 5.2 m above ground
- extraction through opening h 4.2 m
  W 10 m

TRAVEL:
- distance 500 m to 2 km
- stabilized paved road
- max. slope 10 %

4. **STATION 2:**
- maintenance building
- same rails or floor as station 1
- with lifting loading platform

5. **REQUIREMENTS:**
- duration < 4 H
- elevator is mobile and can be parked away
- used every 6 months
- SAFETY is critical:
  - load transfer
  - vertical mouvement
  - transport
- failure of 1 element causes no prejudice
- standard parts for easy maintenance

Situation – Telescope Building

1.5 to 1.8 MDM

Cost of transporter – elevator

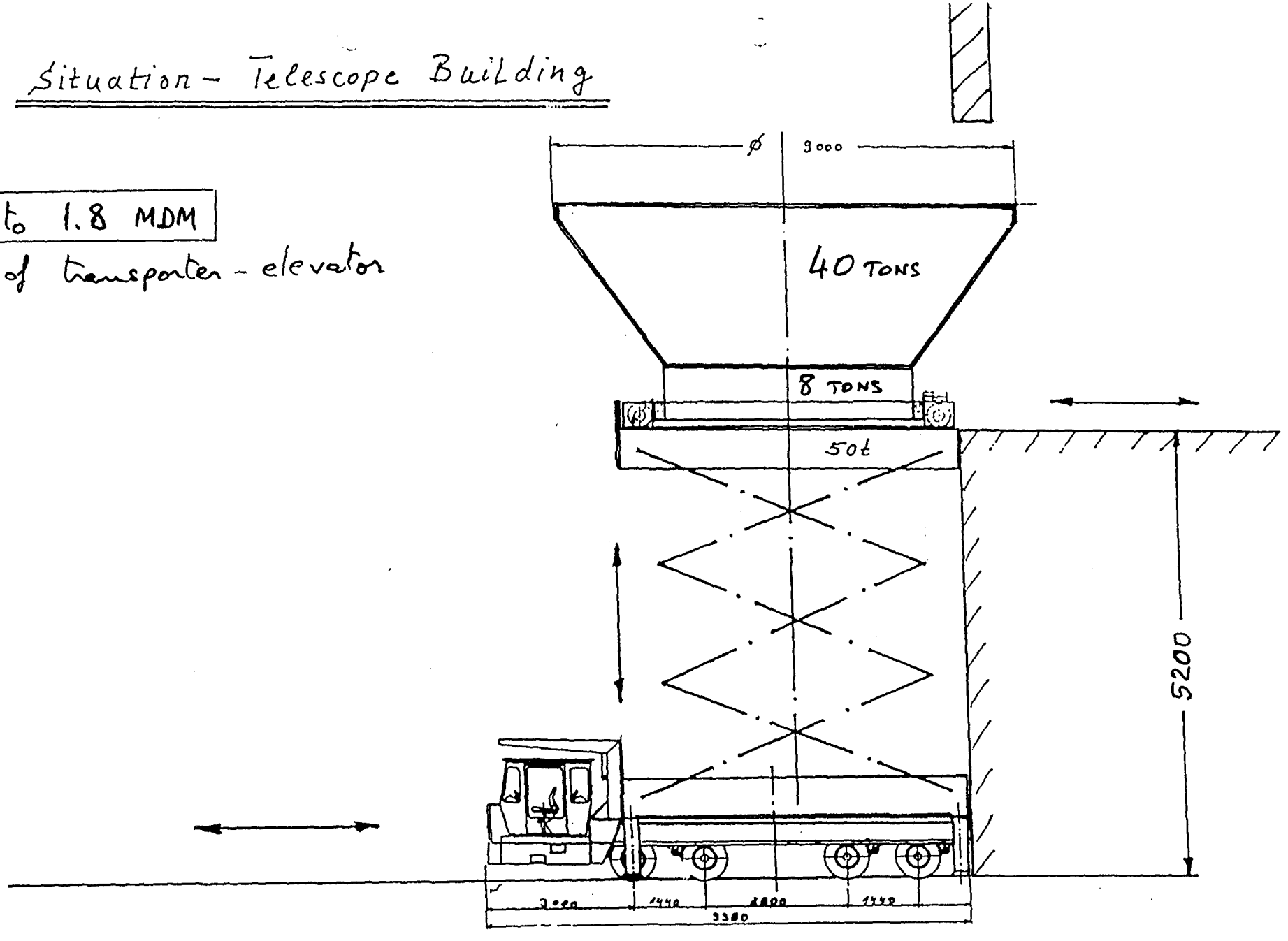

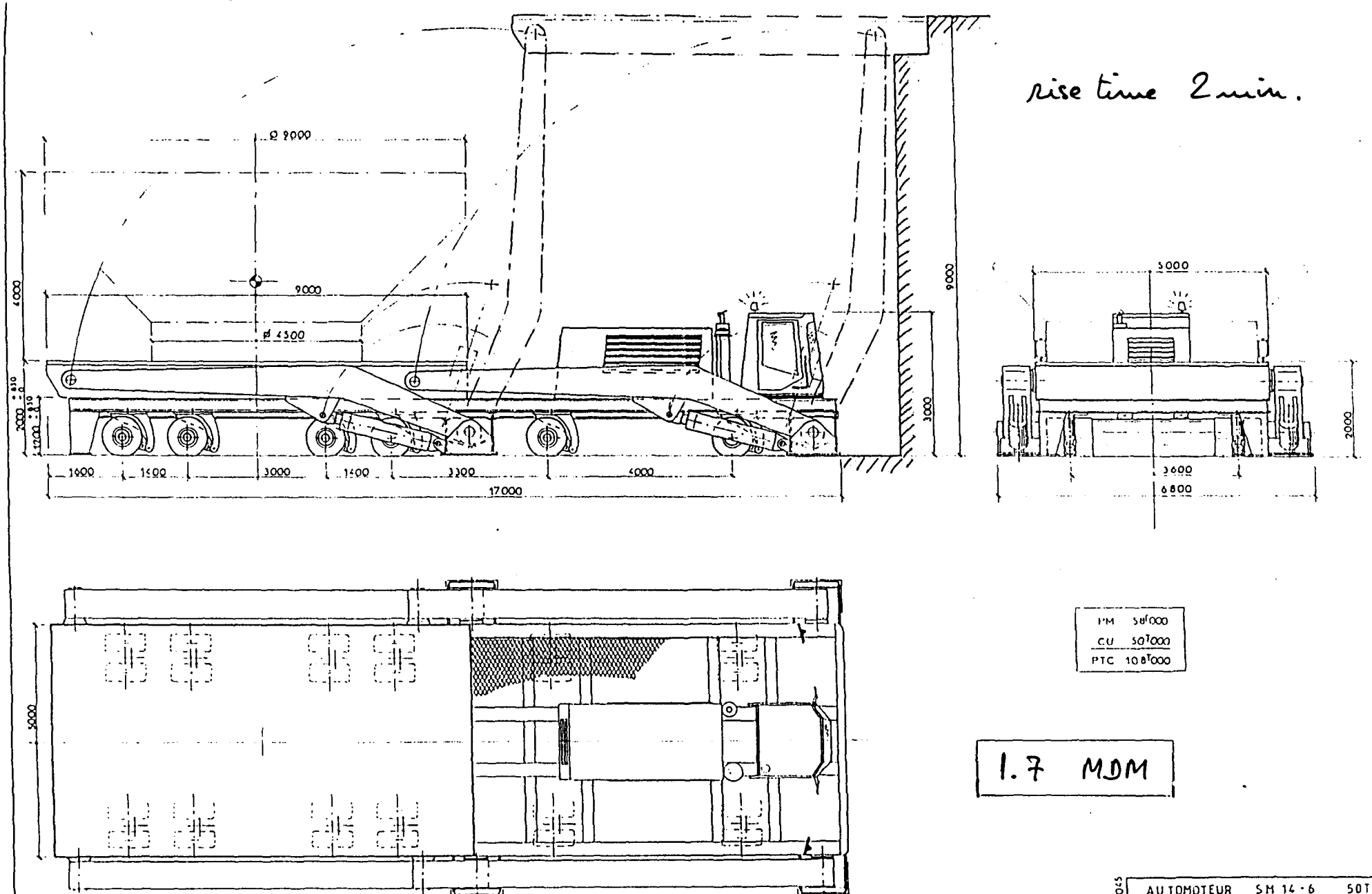
rise time 2 min.
Ø 8000
9000
Ø 4300
4000
2000
1200
1000
1500
3000
1500
3300
4000
17000
9000
3000
5000
2000
3600
6800
5000
PM 58T000
CU 50T000
PTC 108T000
1.7 MDM
AUTOMOTEUR SM 14-6 50T
NICOLAS
89290, CHAMPS/YONNE
CHARDON F
24058 1/2
29.11.90.7045

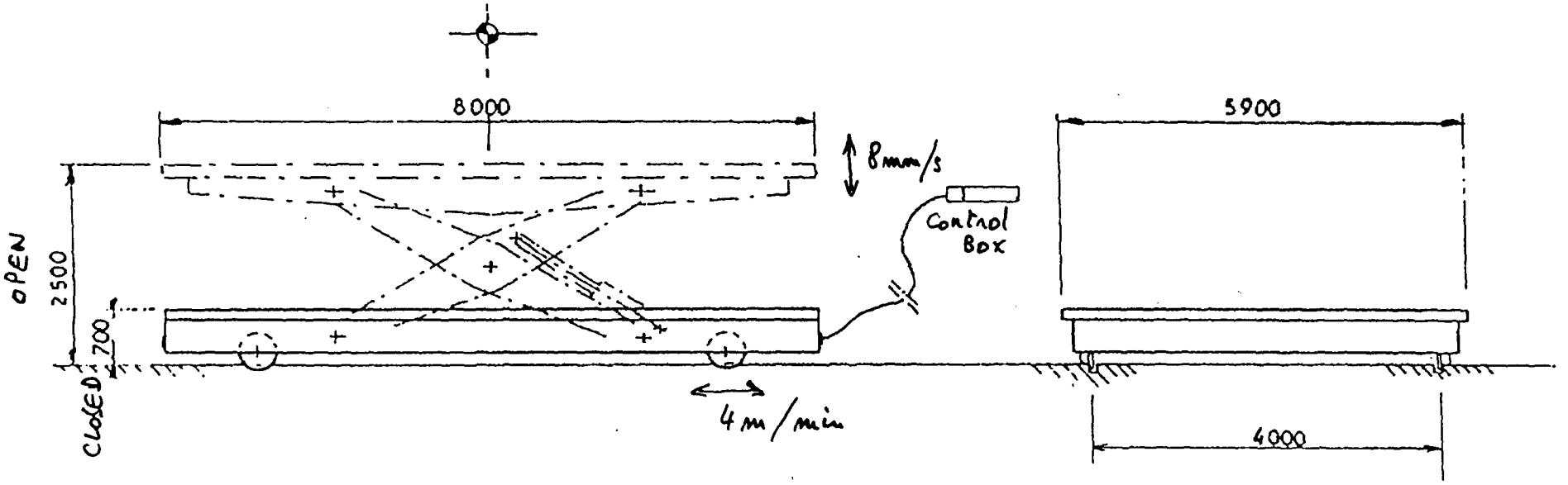

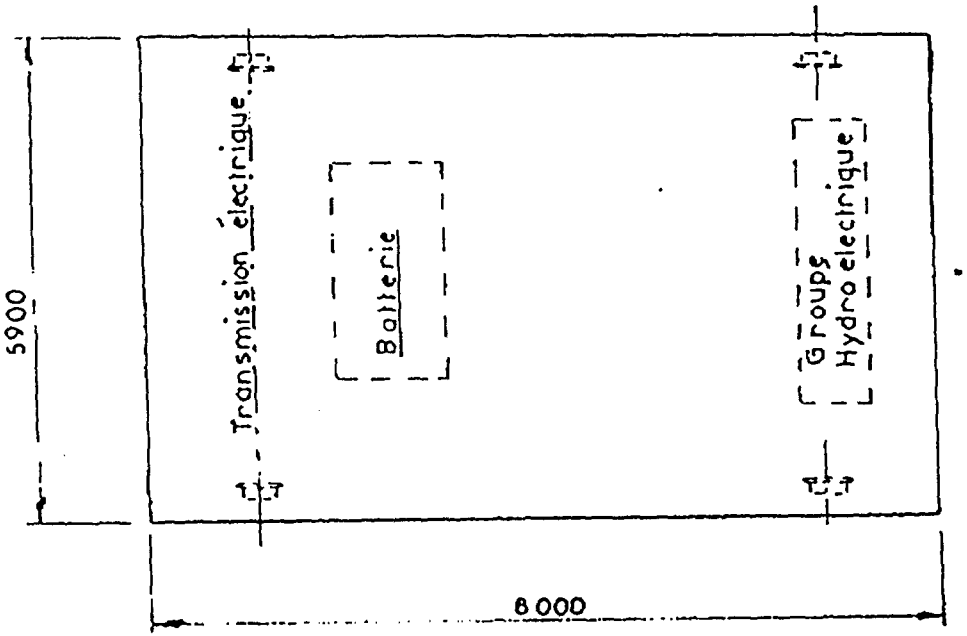

PM 8T 000
CU 45T 000
PTC 53T 000

350 KDM

transmission électrique

AUS

AUTOMOTEUR 45 T à plate-forme élévatrice

1801.91-7083

NICOLAS
89 290 CHAMPS/YONNE

CHARDON - F

24133

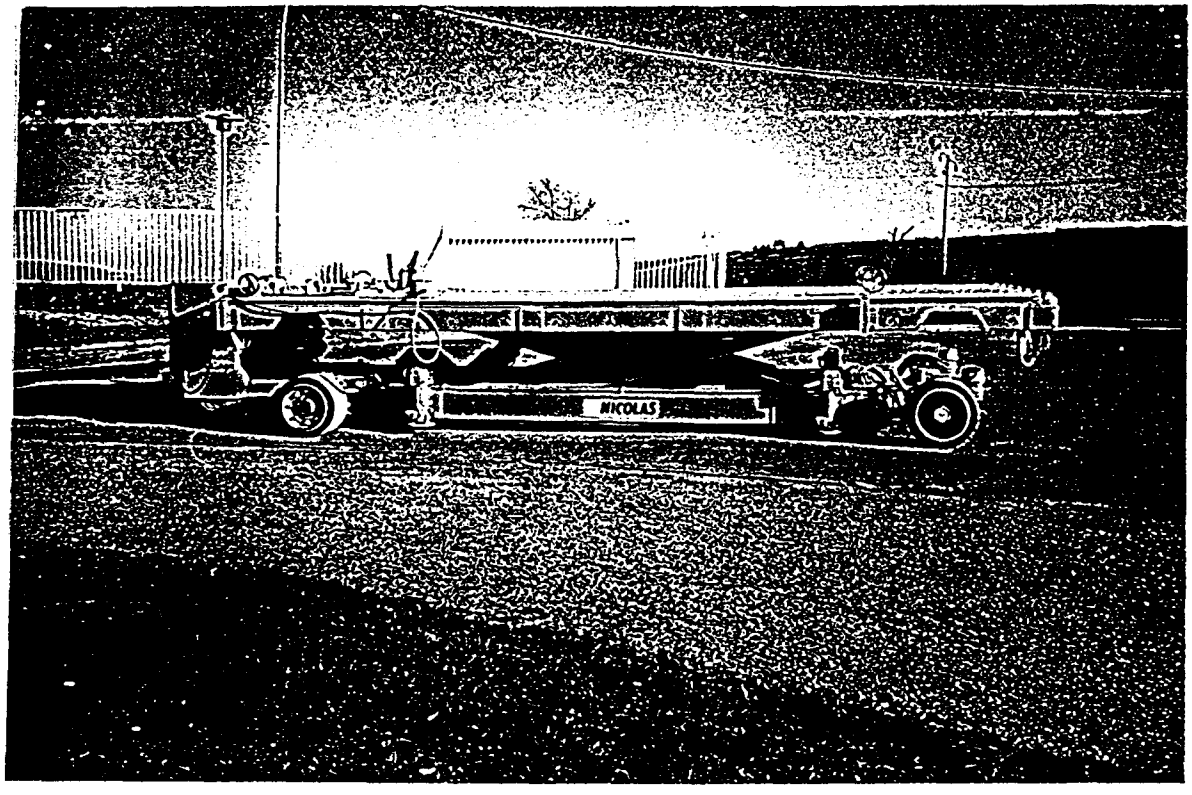

Self propelled carriage including
a lifting platform

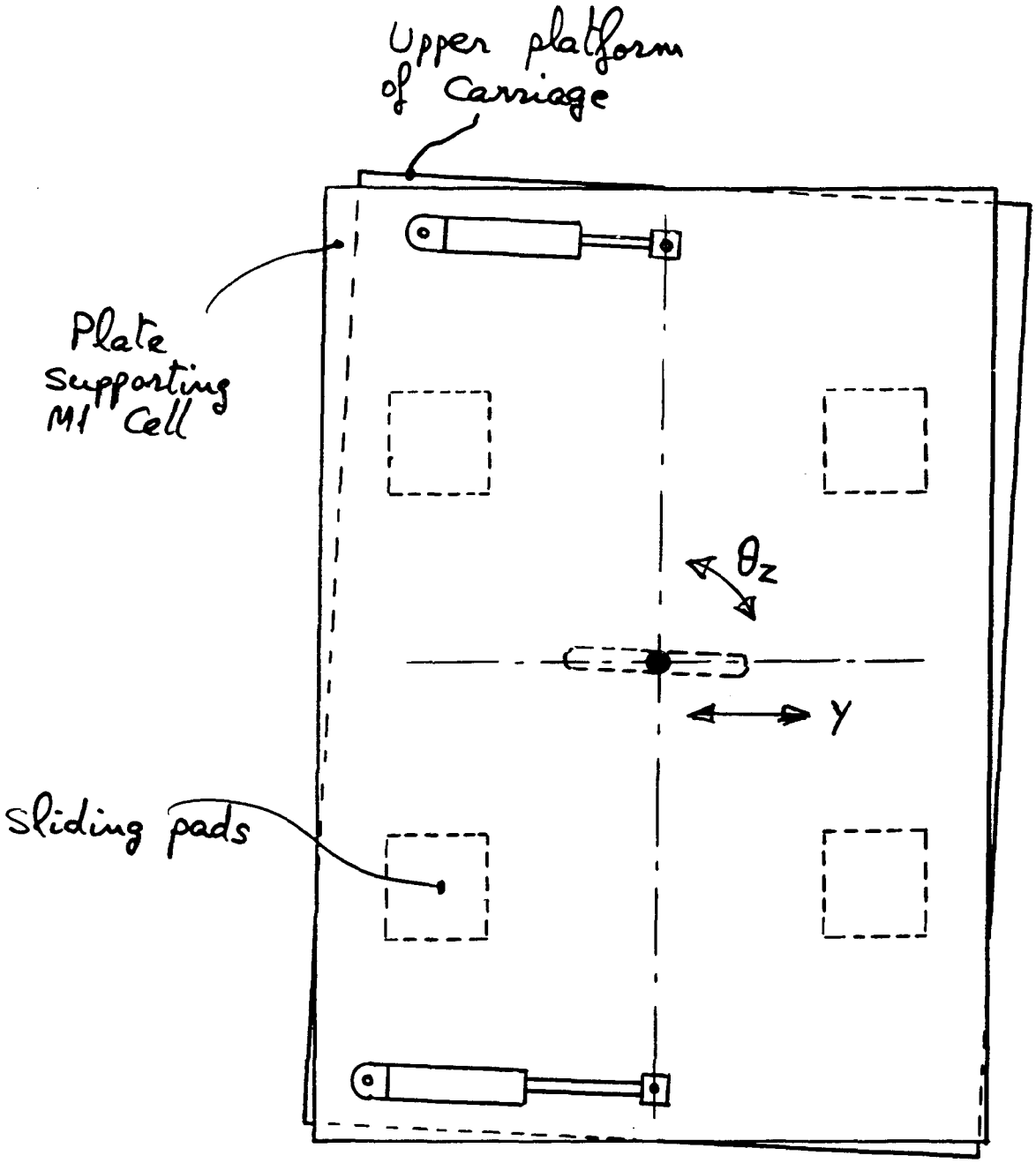

SLIDING PLATES SYSTEM

FOR LATERAL ADJUSTMENT

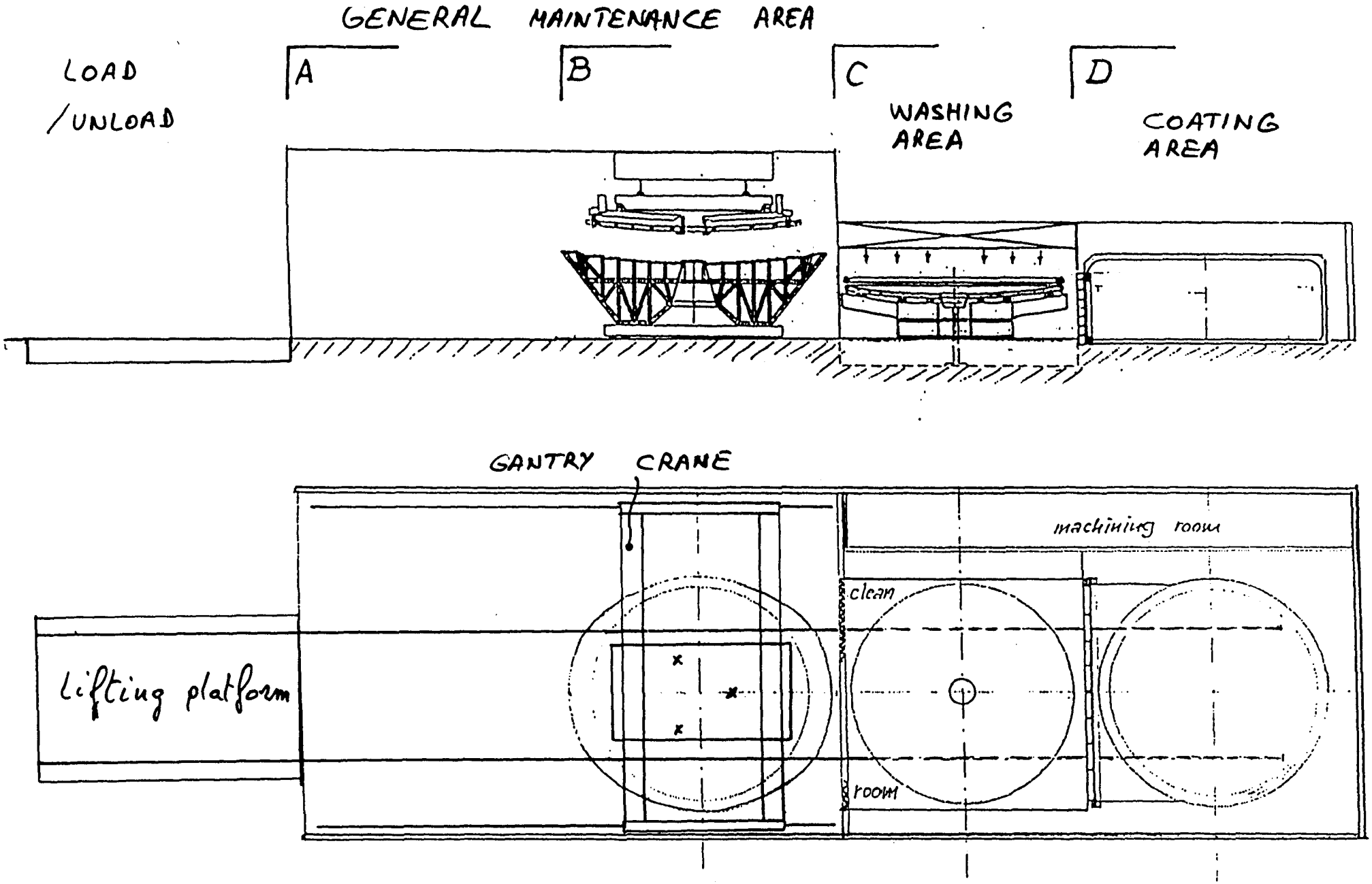

MAINTENANCE BUILDING LAY-OUT

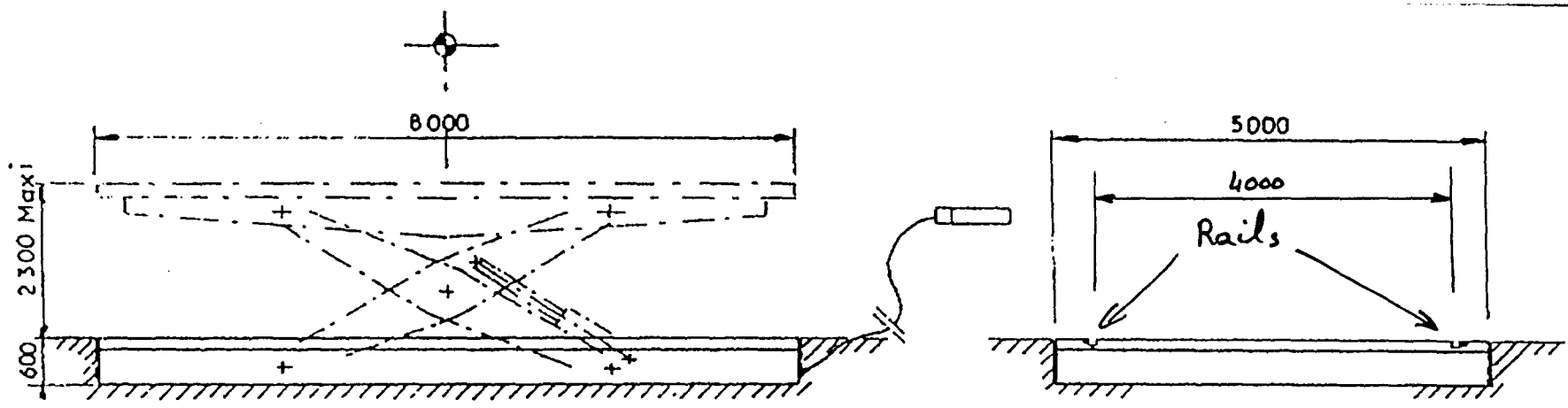

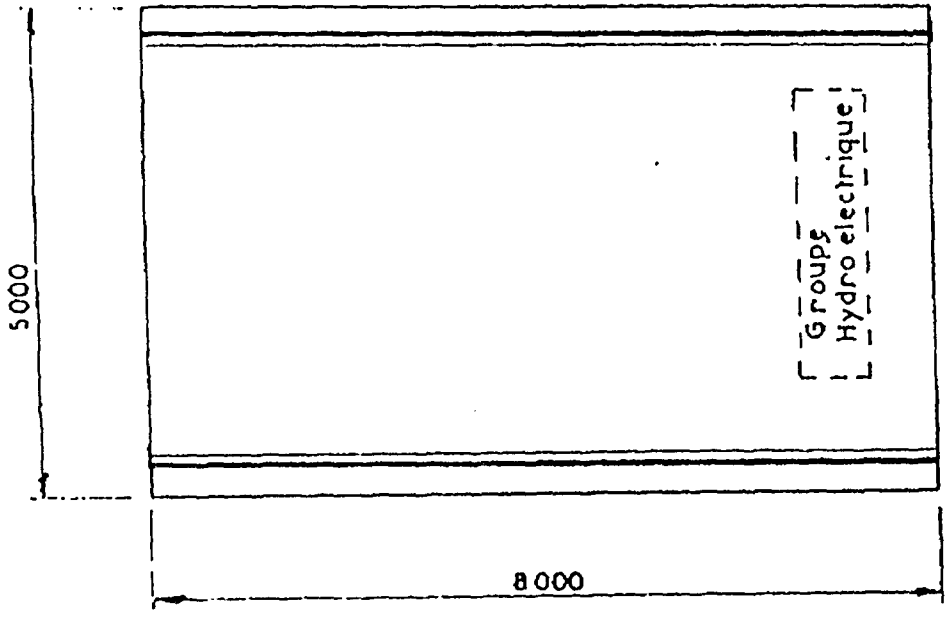

PM	9T500
CU	55T000
PTC	64T500

147 KDM

Lifting platform embedded at entrance of maintenance building

DIV

TABLE ELEVATRICE 55 T

NICOLAS
89290_CHAMPS/YONNE

CHARDON - F

24134

1801.91-7083

INSIDE TELESCOPE

OPTION OFF-CELL COATING

1. GENERAL PREPARATION

* Position telescope
* Lock tube
* Shut down telescope
* Clear floor
* Prepare tracks
* Drive elevator/transporter
* Bring carriage under M1

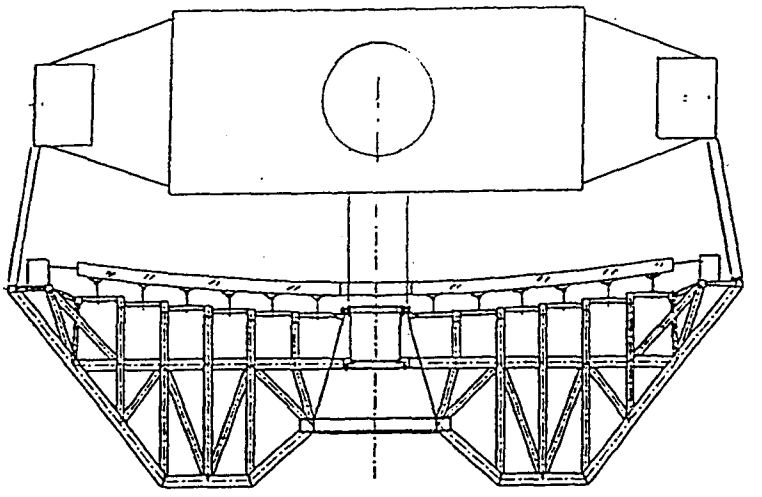

duration	manpower
2H	3

2. PREPARATION OF M1 UNIT

* Disconnect all lines to M1 unit
* Raise lifting platform
* Adjust and attach to M1 cell

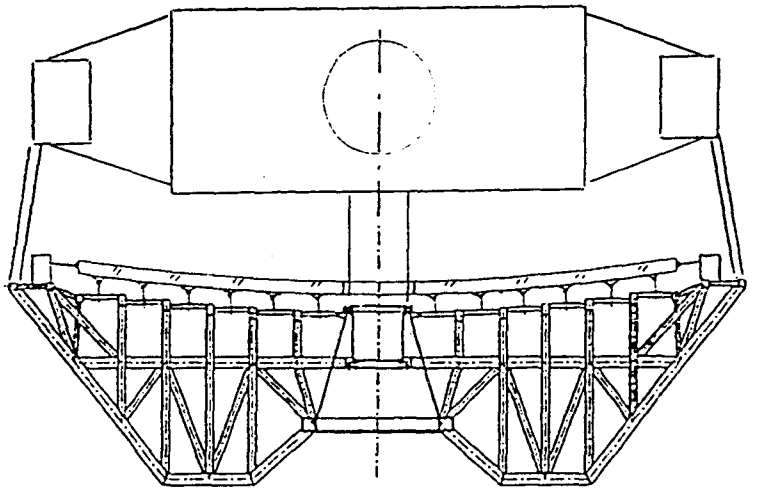

duration	manpower
2H	3

ON TELESCOPE FLOOR

OPTION OFF-CELL COATING

3. REMOVAL OF M1 UNIT

* Disconnect attachment M1 cell to telescope
* Lower M1 unit

* Slide carriage out of fork
* Install rigid cover

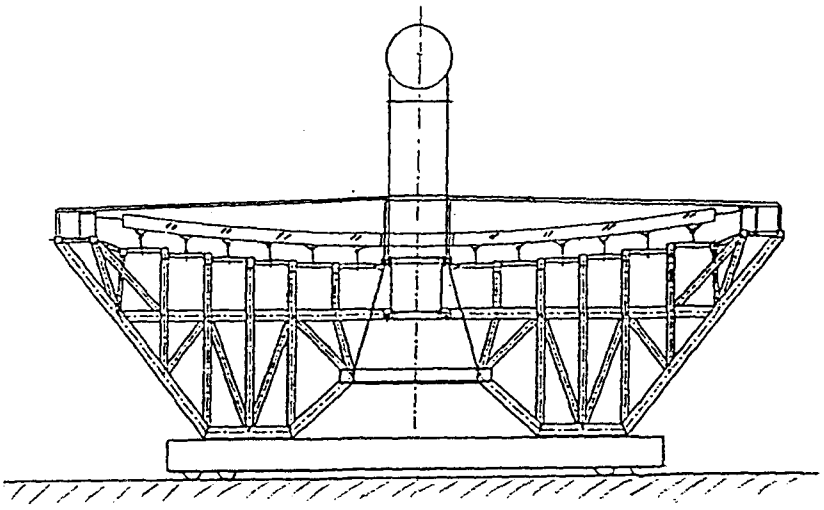

duration	manpower
3H	4

4. TRANSPORT OF M1 UNIT

* Remove M3 and tower
* Cover hole
* Slide carriage on elevator
* Lower elevator
* Transport to maintenance building

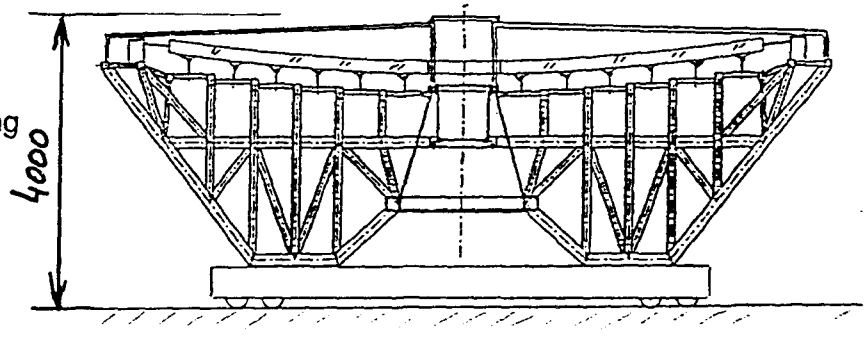

duration	manpower
4H	4

END OF FIRST DAY: TOTAL 11 H

IN MAINTENANCE BUILDING

OPTION OFF-CELL COATING

5. PREPARATION OF M1 UNIT

* Roll in carriage in the preparation area and align
* Prepare gantry crane and attach to cover
* Install guides on M1 cell
* Disconnect cover from M1 cell
* Remove cover and store

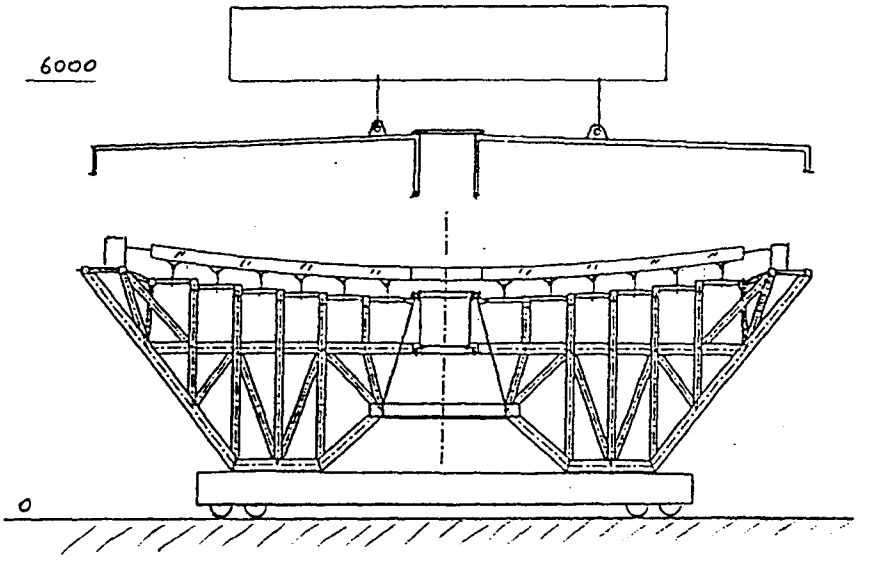

duration	manpower
1H	3

6. PREPARATION OF M1 MIRROR

* Disconnect 64 rods of lateral supports (5 minutes/rod)
* Disconnect lateral fixed point

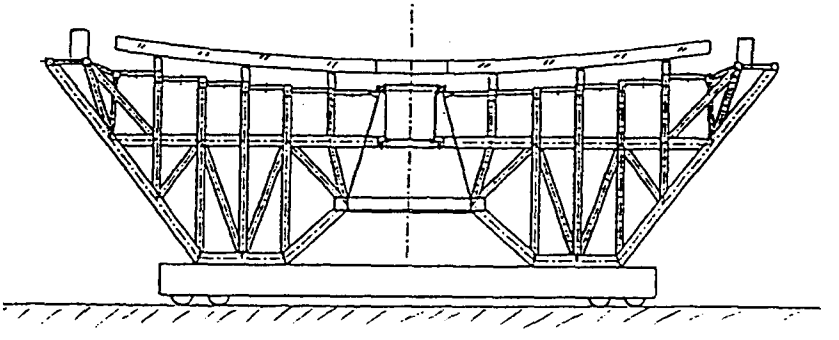

duration	manpower
3 H	3

IN MAINTENANCE BUILDING

OPTION OFF-CELL COATING

7. PREPARE HANDLING OF M1

* Bring handling tool attached to crane
* Lower handling tool and guide into position
* Attach the 15 clamps to M1

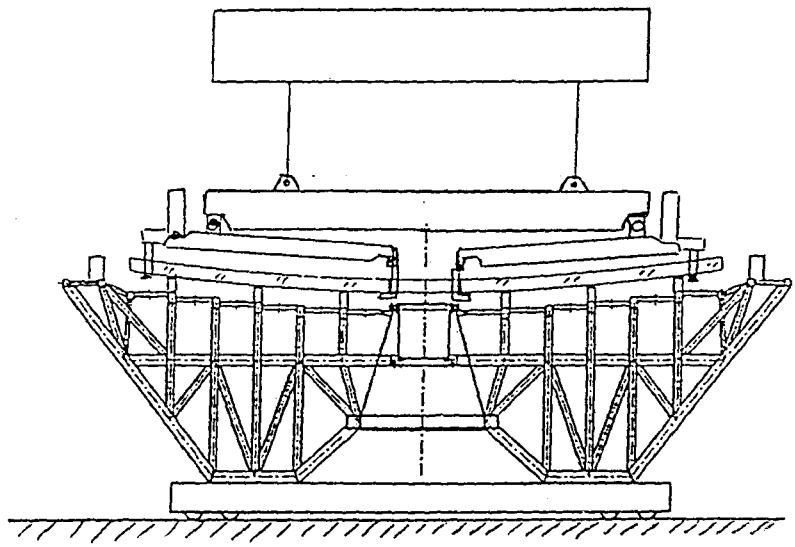

duration	manpower
1 H	3

8. HANDLING OF M1

* Lift M1
* Remove cell
* Roll in the support trolley
* Lower M1 on trolley
* Detach the 15 clamps
* Lift handling tool
* Roll trolley to washing area

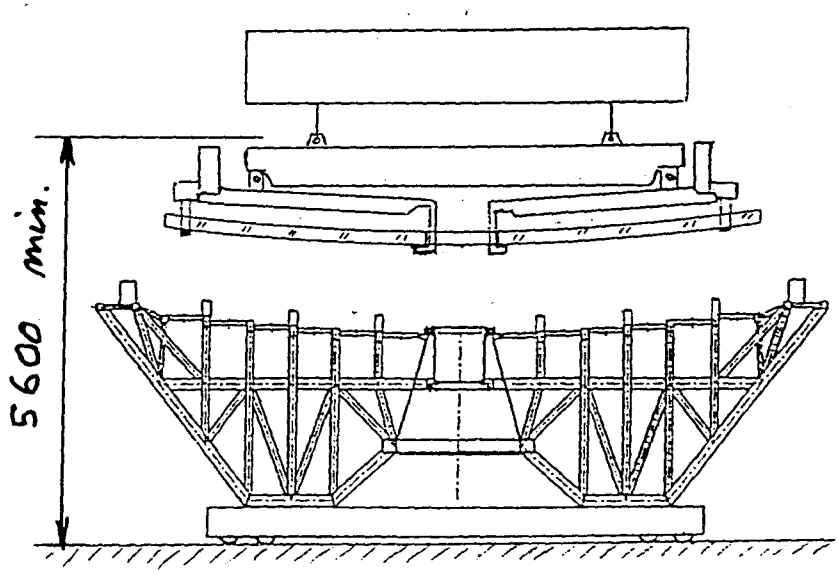

duration	manpower
1 H	3

END OF SECOND DAY: HANDLING 6 H
+ WASHING
+ PREPARE FOR COATING

M1 COATING

	PREPARATION TIME	
	M1 ALONE	M1 IN CELL
1. GENERAL PREPARATION	2H	2H
2. PREPARATION OF M1 UNIT	2H	8H
3. REMOVAL OF M1 UNIT	3H	3H
4. TRANSPORT OF M1 UNIT	4H	4H
TOTAL DAY 1	11H	17H
5. PREPARATION OF M1 UNIT	1H	1H
6. PREPARATION OF M1 MIRROR	3H	
CELL		4H to 12 H
7. HANDLING OF M1	2H	
PREPARATIONS FOR WASHING		4H
8. AFTER WASHING		2H
9. PREPARE FOR COATING		4H
TOTAL DAY 2	6H	15H to 23 H
TOTAL HANDLING TIME	34 H	58 H to 74 H

including re-installation in telescope

HANDLING TOOL ON M1

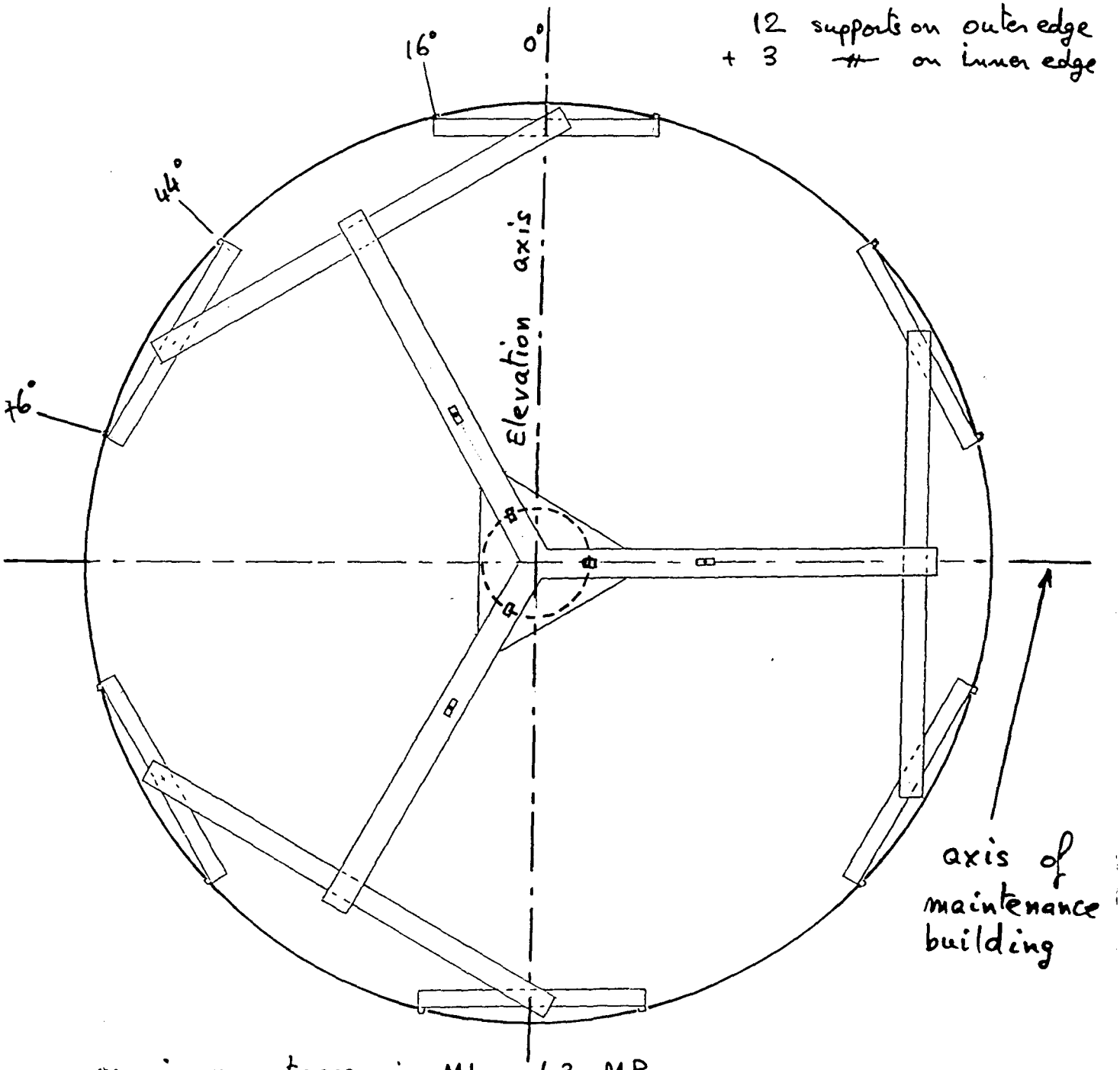

maximum stress in M1 : 1.3 MPa

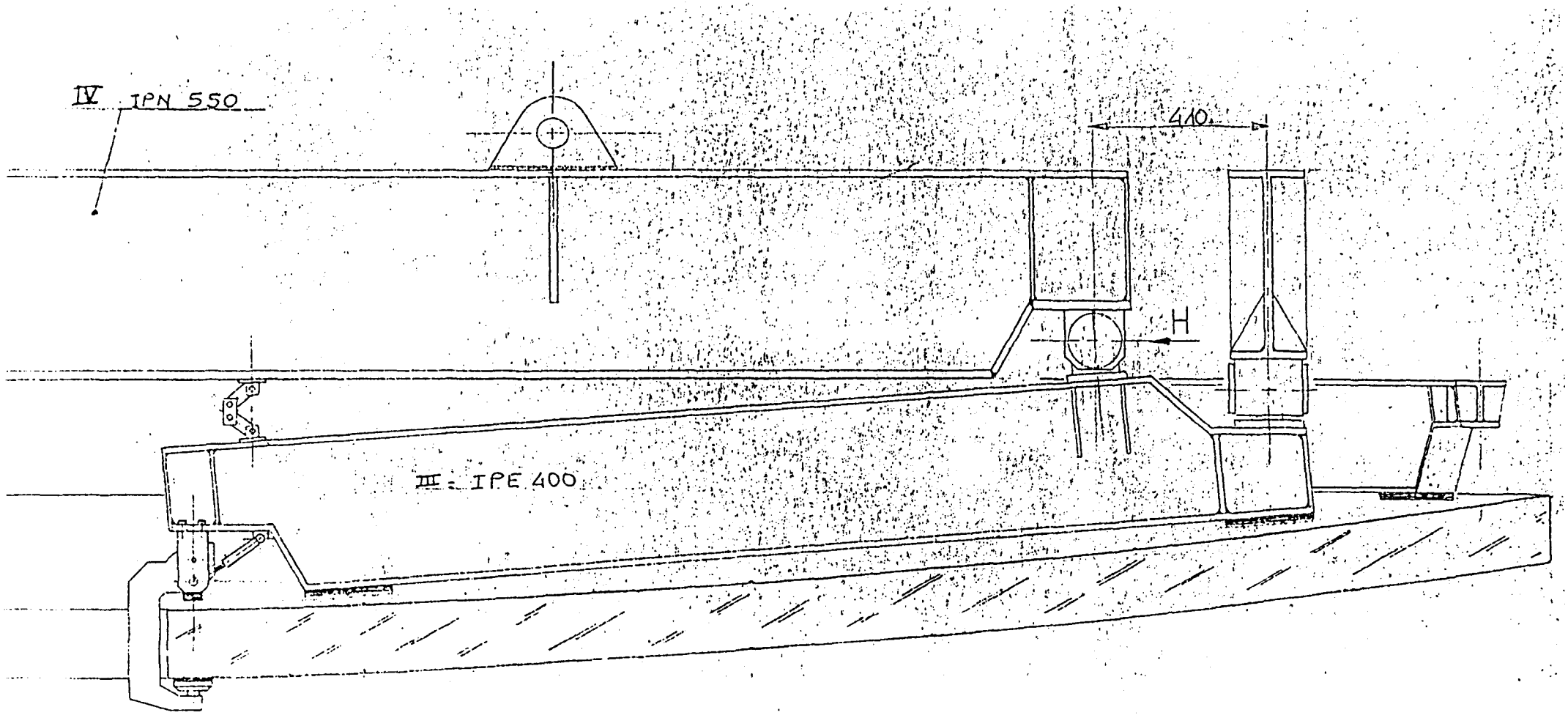

MIRROR HANDLING TOOL

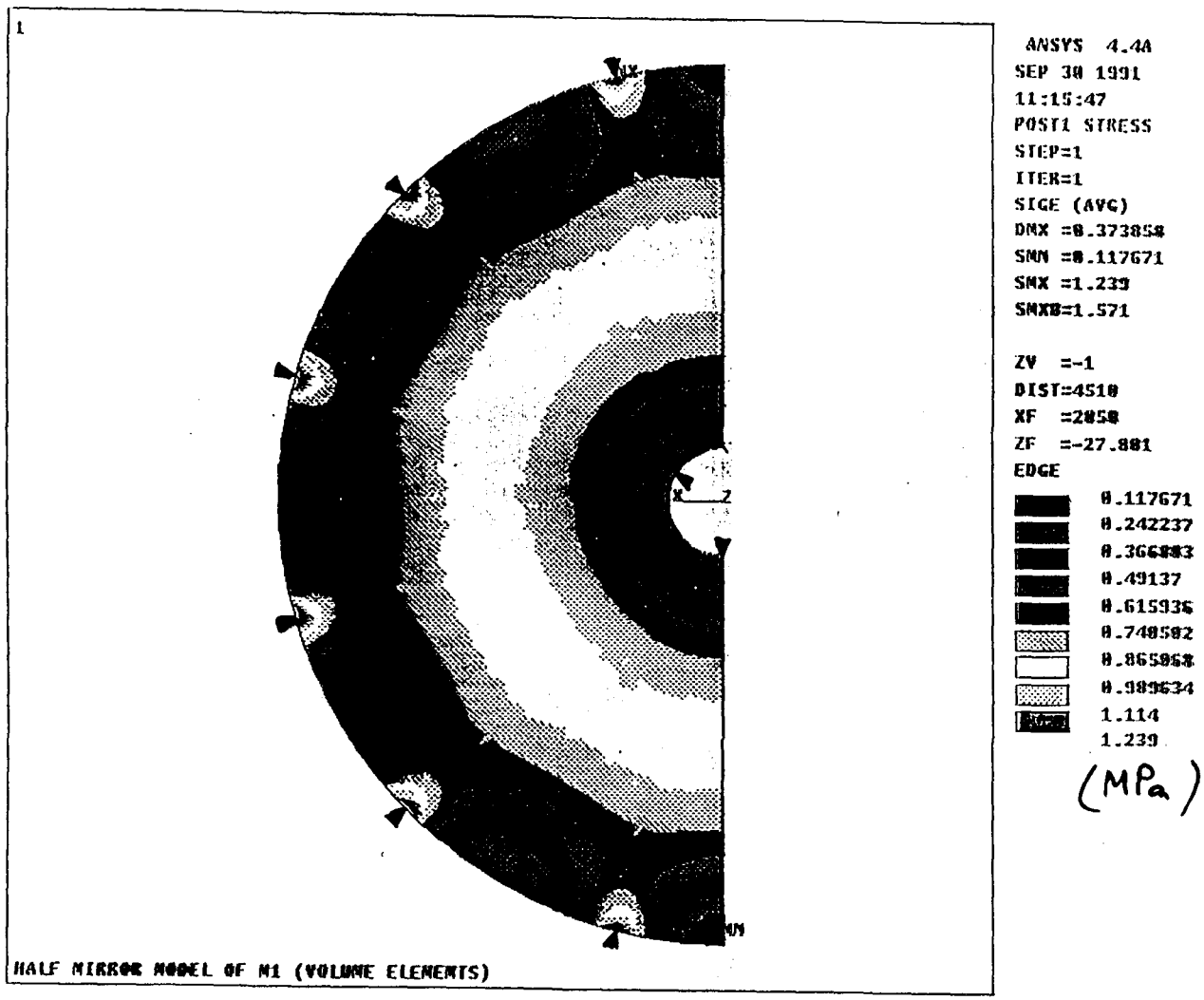

M1 supported by handling tool

Von Mises stress at bottom surface of M1 mirror

$\overline{\sigma}_{max} = 1.24$ MPa

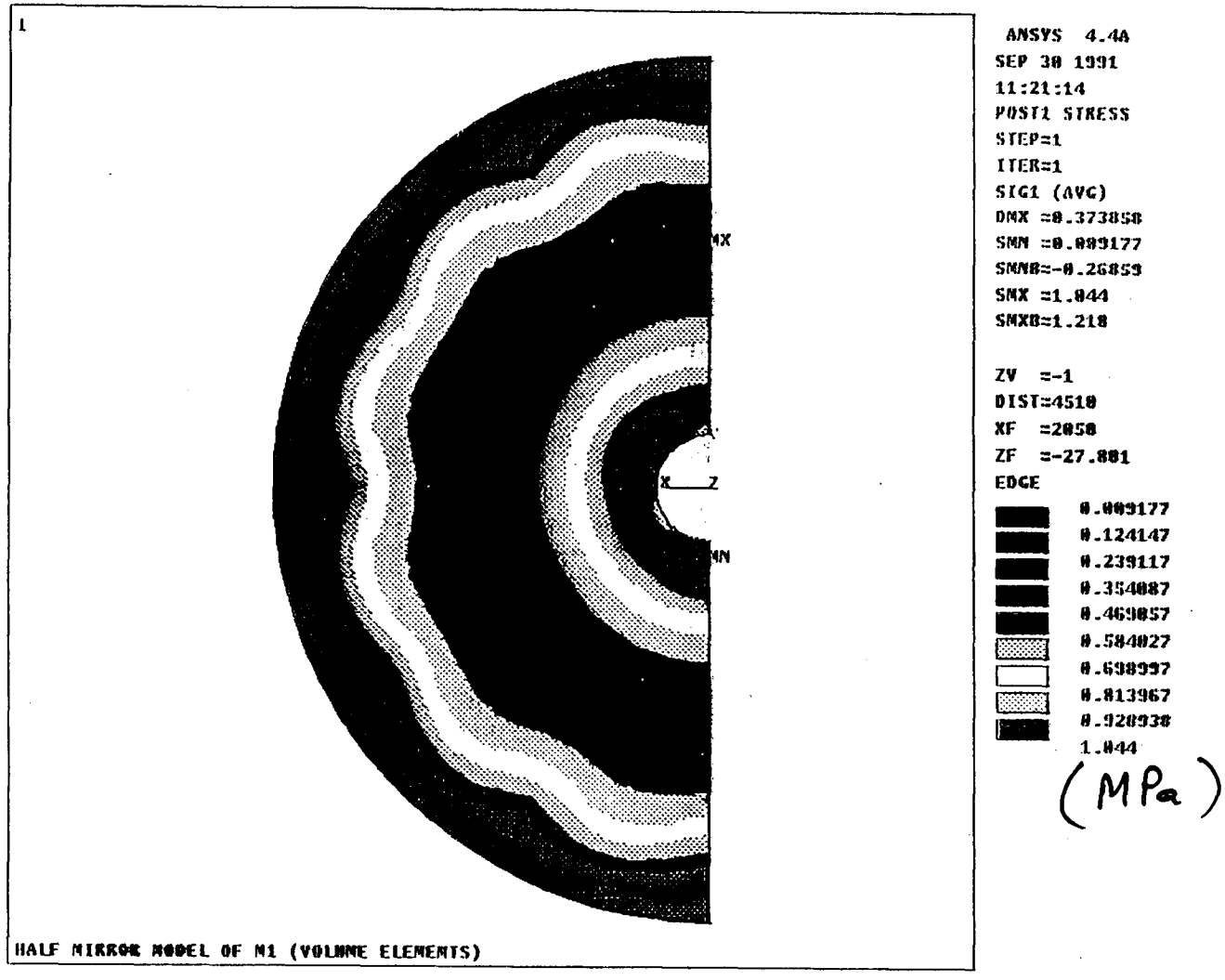

M1 supported by handling tool

Principal stress at bottom surface

$\sigma_{1\,max} = 1.04$ MPa

Coating and Coating Equipment

Questionnaire by K. Raybould

CLEANING MIRROR PRIOR to COATING

"Coating Clean" often means 'absence of detrimental impurities ...'

INITIAL CLEANING – uncoated mirror

- Optician's residue, oxides
- Exotic dust particles
- Chemical residue from stripable protection

WASHING BEFORE STRIPPING –

- CO_2 Cleaning
- Long soaking vs multiple washes
- Degreasing spots; acetone vs

SAFETY ATTIRE!

Options in STRIPPING CHEMISTRY

(assume Aluminum Oxide or Silver/copper or Chrome

- Empirical or analytical derived...
- Short-cut to Stripping?
- How much rubbing is too much
- Alternatives to 'manual scrubing/wiping
- Removing the last traces of old aluminum, important?
- Cleaning bevels & edges.
-

CLEANING (cont.)

SAFETY - -

NITRIC ACID WASH -

- Alternate de-greaser
- Viable alternative to Glow Discharge ?
- Multiple wash cycles
- SAFETY CLEANUP !

RINSE

- Filtered tap H_2O vs De-ionized / De-mineralized vs Steam Distilled
- How much & how long
- Mechanical rubbing / wiping ?

DRYING

- Towels vs Chamois (only washing) vs _____
- Blow drying, nitrogen

FINAL CLEANING

(Electro-static de-ionizer(s) or precipitator)

- Distilled water only
- Solvents ; Safety , residue
- Alternatives to most volatile, Iso. & ___ alcohol with very low water
- Verification &/or Test of 'Coating Clean'

  Indicators: 'Black Breath pattern(s)
  Wipping friction
  High intensity light . . .

ELECTRICAL Discharge method(s)

- To GLOW or not to Glow
  - Why not ?
  - What are the cost / risks ?

- Optimum Gas , pressure level, duration

- Oxygen essential ?
- Limitation of 'Glow discharge'

How well did you do ? —

- Reflectivity / emissivity
- Adhesion
  - (mil. Spec. 'Scotch tape'
- Visual inspection
  - importance of visual/visible defect

Presentation by B. Mack

Integration / external

- CO_2 Snow technique
- Quality Control techniques
  1. Reflectometers
  2. Scatterometers
- Eximer Laser Cleaning
- Other Plans for cleaning in situ.

4.2 m. 120 nm. ± 2½%

TIME - 12-15 Seconds.
POWER - 125 KVa.

8.2 m. 120 nm ± 2½%

TIME - ?
POWER - 200-300.

2m → 4m → 8m.

IS THIS POSSIBLE.

ARE THERE EASIER ALTERNATIVES.

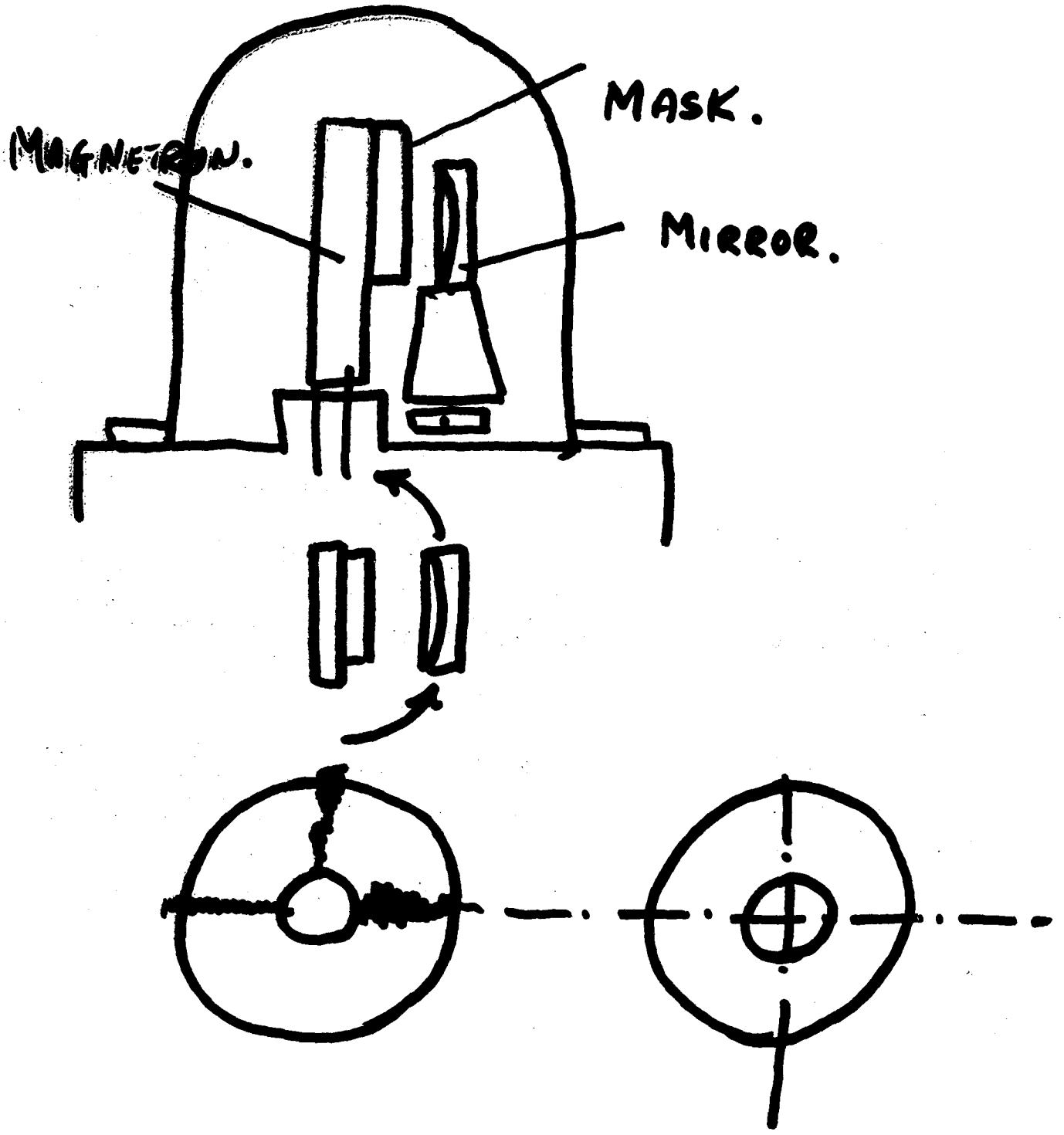
MASK.
MAGNETRON.
MIRROR.

FIG 7 : Types of magnetron installation

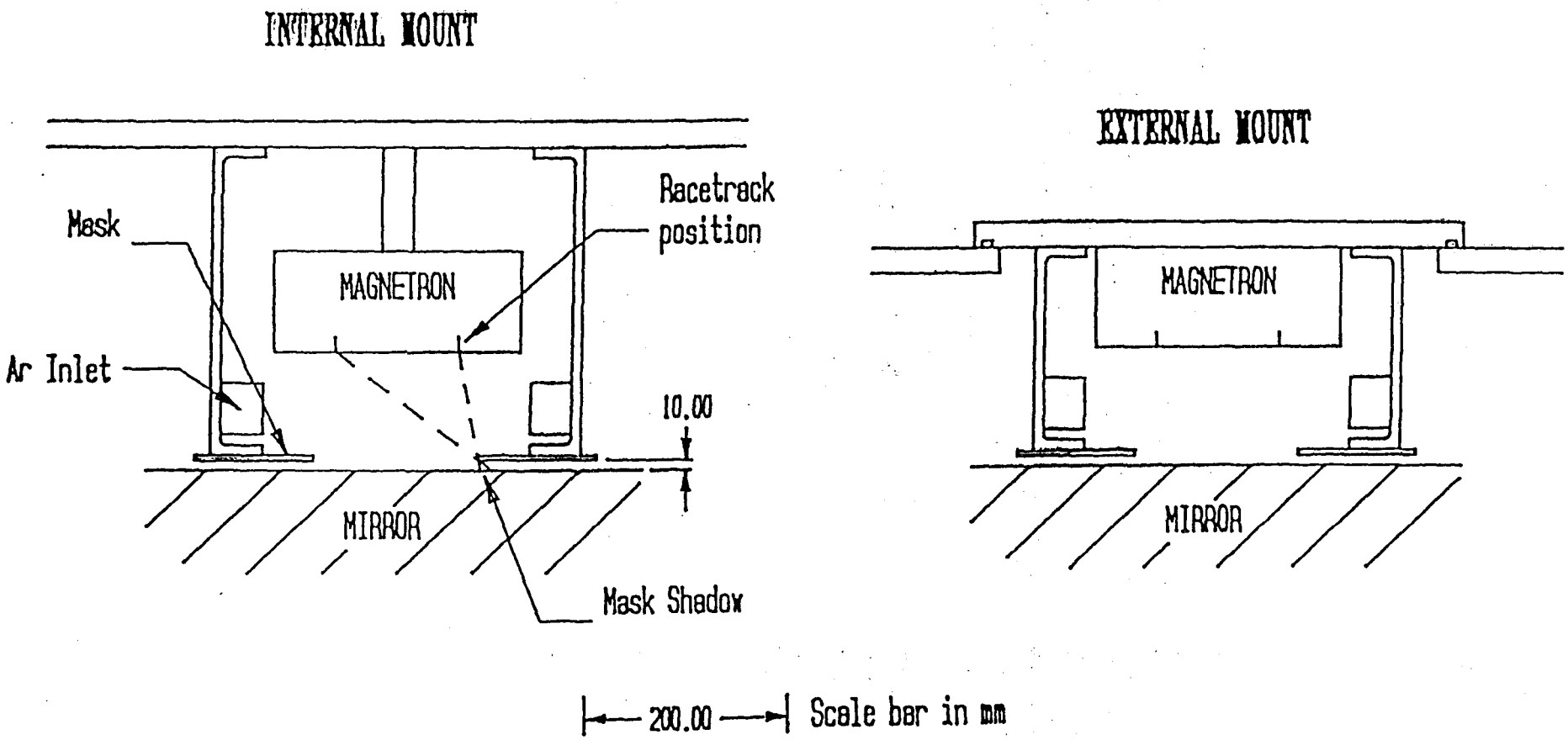

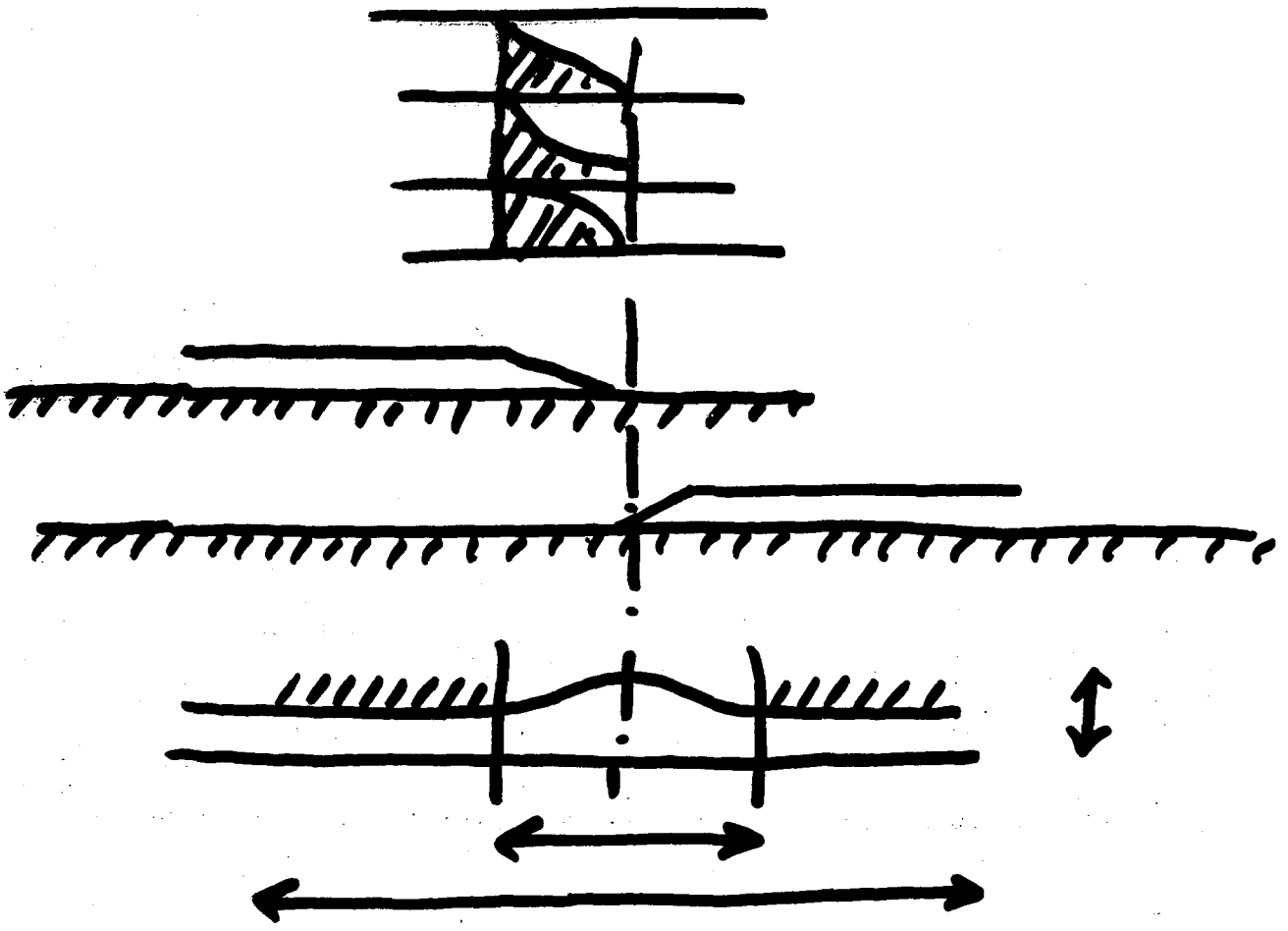

(1) DIFFRACTION. SPIKE
(2) QUALITY OF COATING THICKNESS
(3) REFLECTIVITY.
(4) ADHESION.

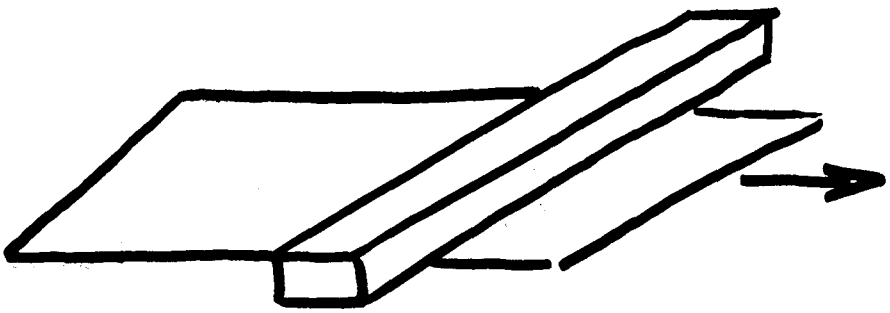

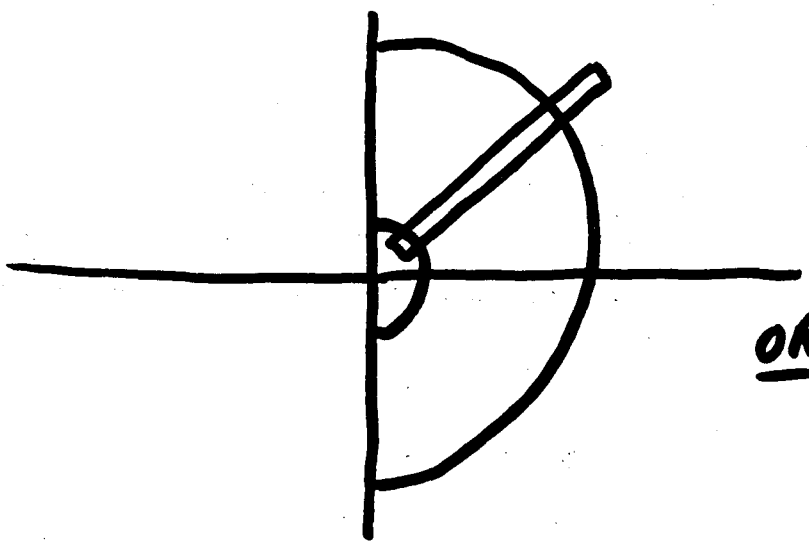

MOVE.
MAGNETRON.

OR. MOVE
MIRROR

SPEED $\simeq$ 1m / min

8m mirror 25m.

2 REVS / HOUR.

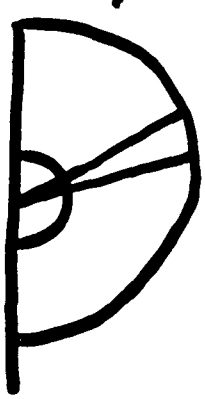

MASK.
CONTROL.

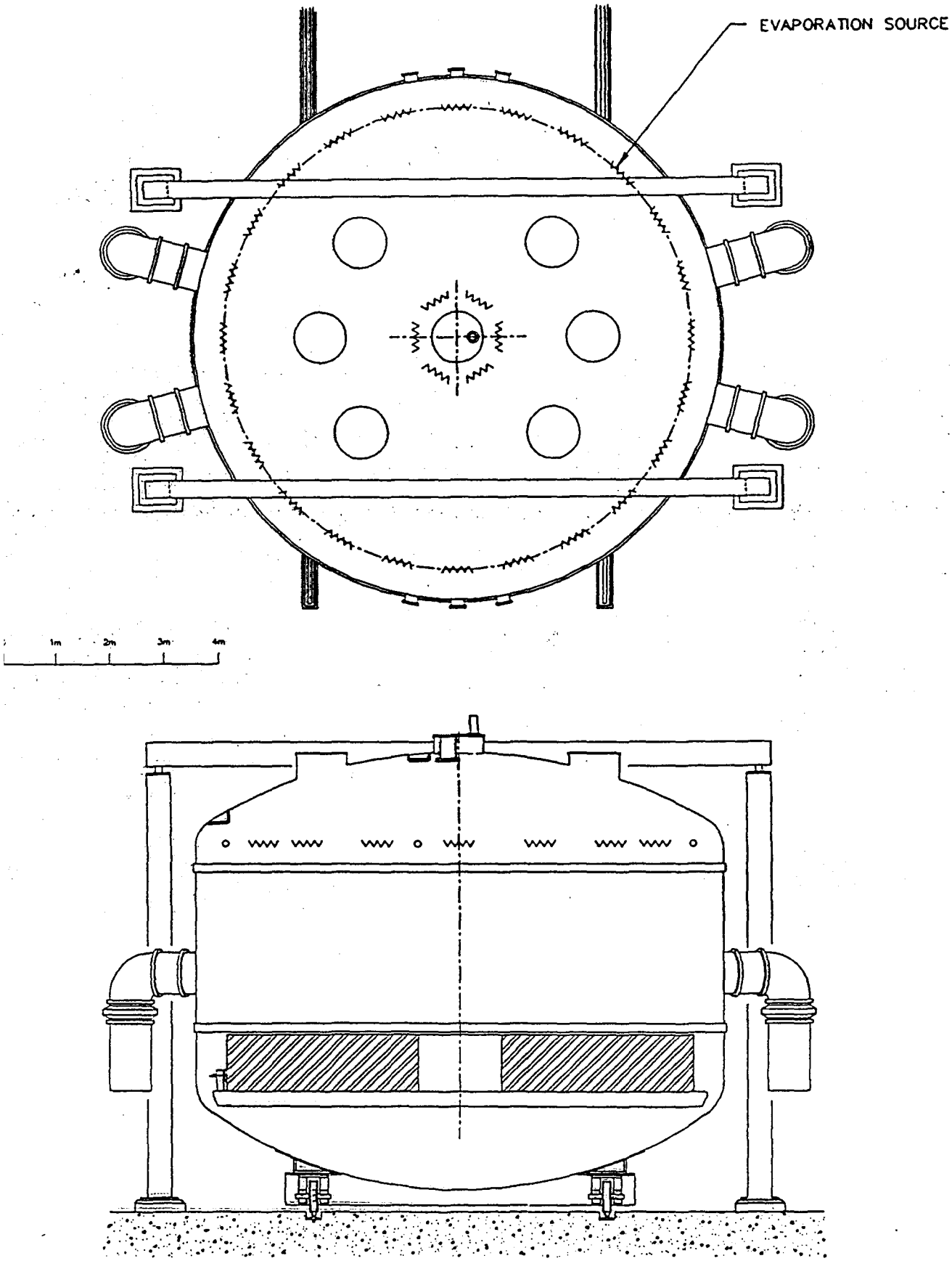

8m MIRROR ALUMINISING TANK USING EVAPORATION

Figure 2

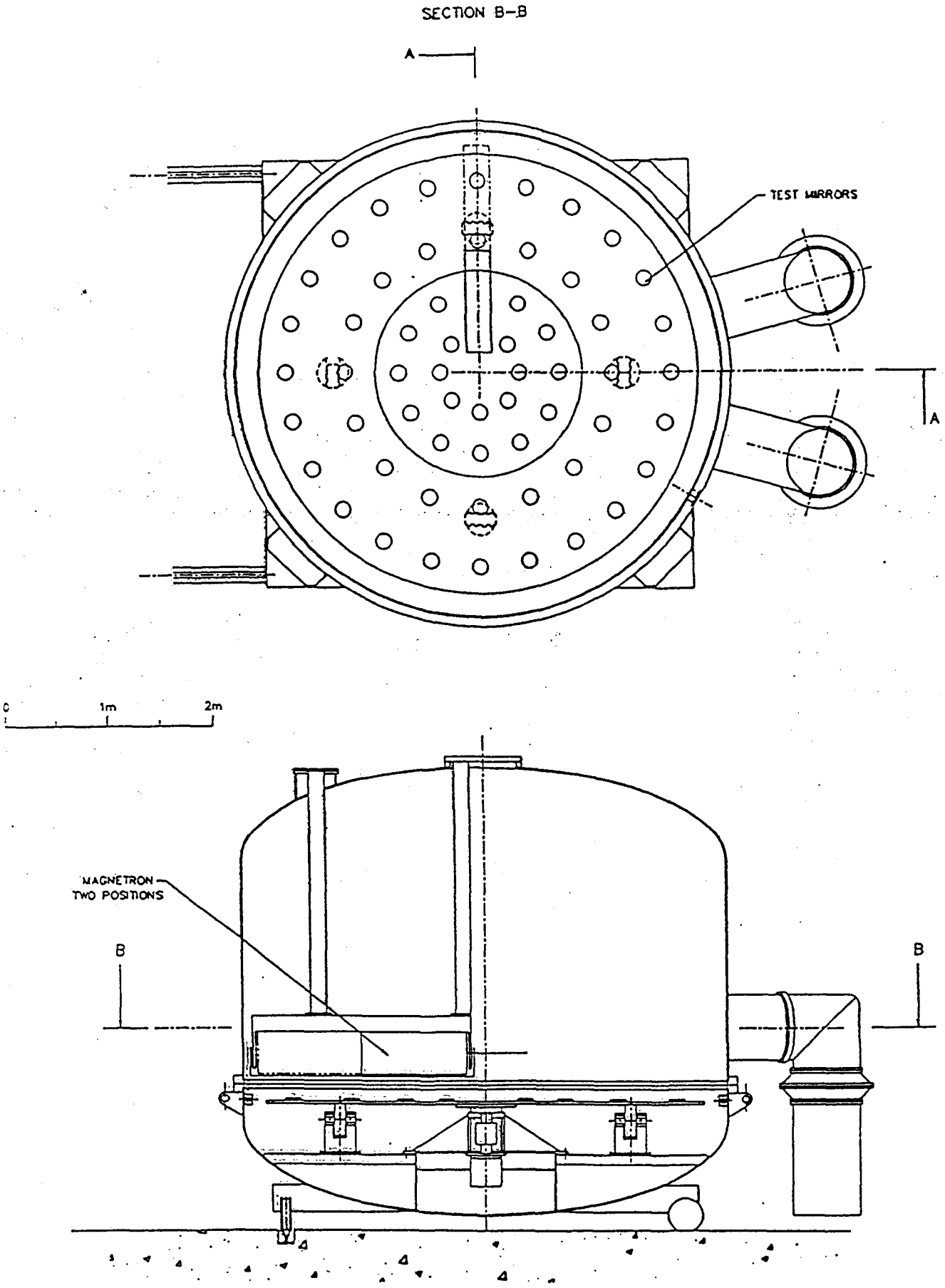

4.2m ALUMINISING TANK
WITH SPUTTERING TEST EQUIPMENT
APP II Figure 6

42MAGT1

EVALUATION OF COATING UNIFORMITY PRODUCED BY SPUTTERING

S.P.Worswick and A.S.Monk
RGO

A spherical surfaced mirror with a radius of curvature of approximately 250mm and a diameter of 150mm was used for this test. The mirror has a central hole, with a linear extent of one third the diameter of the mirror, which allowed the radial deposition of the sputtered coating as proposed for the 8m mirror.

The mirror surface was checked, in its uncoated state, using a scatter plate interferometer with a helium neon laser as the source of illumination. The resultant fringe pattern was photographed and analysed using WISP software. The test was set up twice with the fringes running in two directions, at 90 degrees to each other, across the mirror. The mirror surface is of good quality with localised surface deviations at the lambda/8 level and RMS deviations of 0.04 lambda (see Figure 1).

Tests of two sputtered coatings were undertaken. The first set (tested 30th May 1990) was on a coating which showed a band of reduced reflectivity at the overlap region where the sputtering source was switched on and off. The interferometer was set up with fringes running both perpendicular and parallel to this band to look for a step function or slope in the reflected wavefront which might be associated with this feature. The uniformity of the fringes limit such an effect to the lambda/8 level and the RMS values from the measurements are again at the 0.04 lambda level (see Figure 2).

The second test was of the surface produced by the sputtering run made on the 11th September 1990 when the magnetron was powered off with a ramp-down voltage. The area of reduced reflectivity was much smaller and could only just be detected under close inspection. A similar set of fringes to the previous tests were produced, again looking for distortions in the reflected wave front arising from the overlap region in the coating (see Figure 3). As with the previous test no noticeable localised fringe shifts are present and the measured RMS values are still about 0.04 lambda.

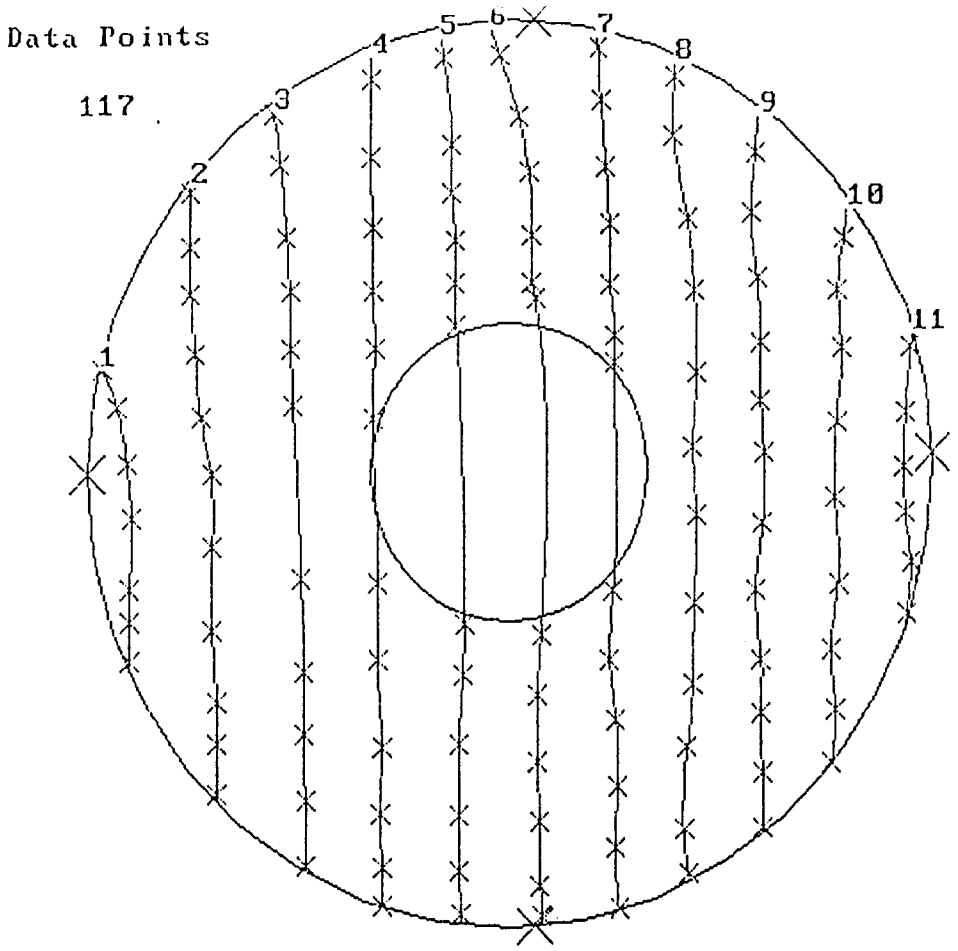

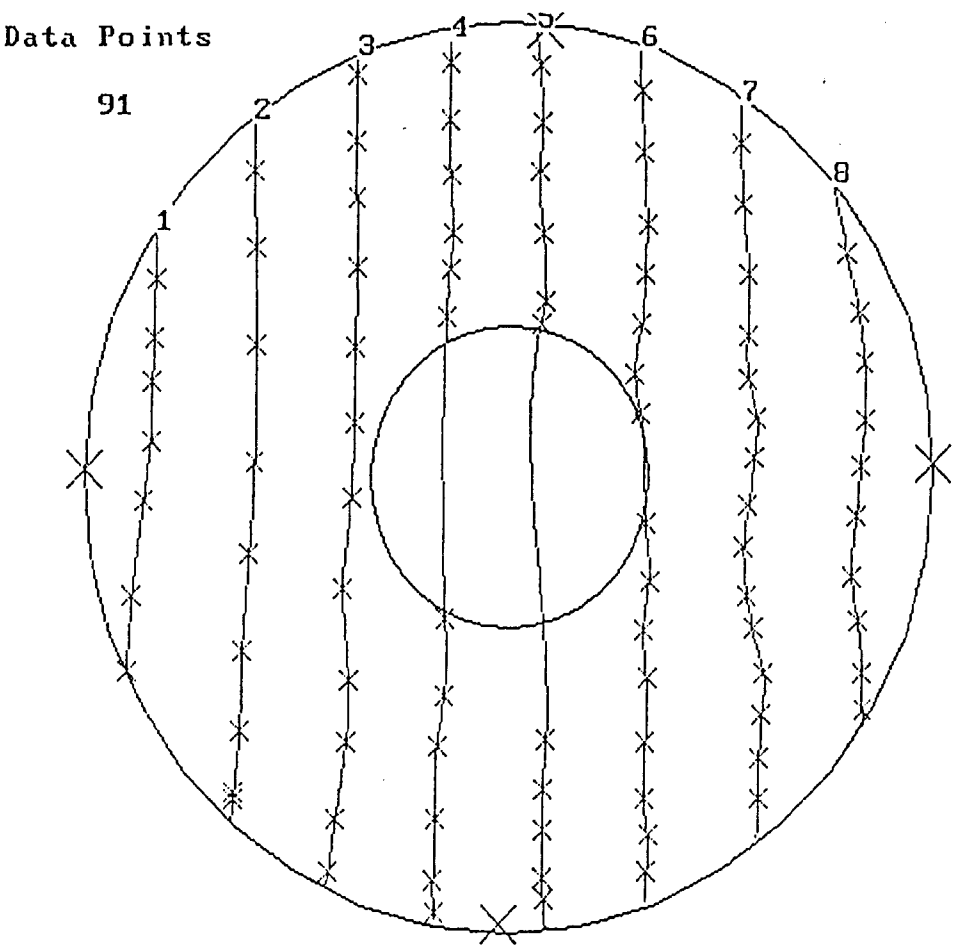

Figure 1: Tests of uncoated spherical mirror.

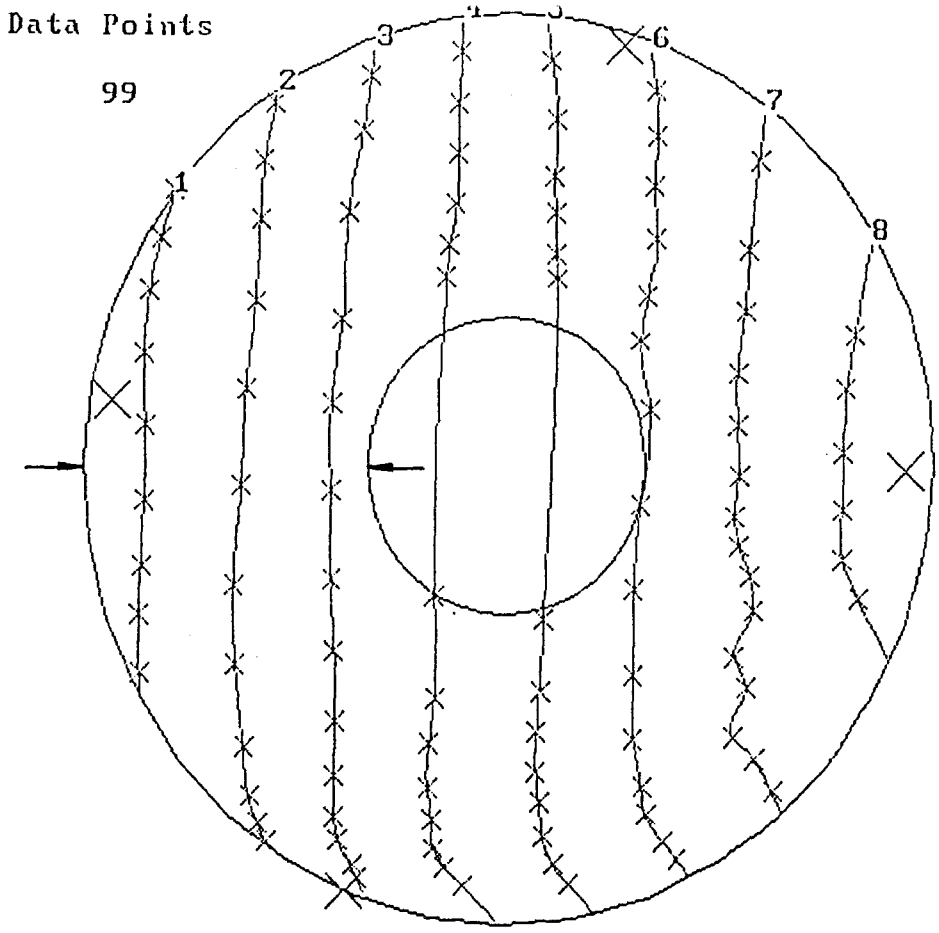

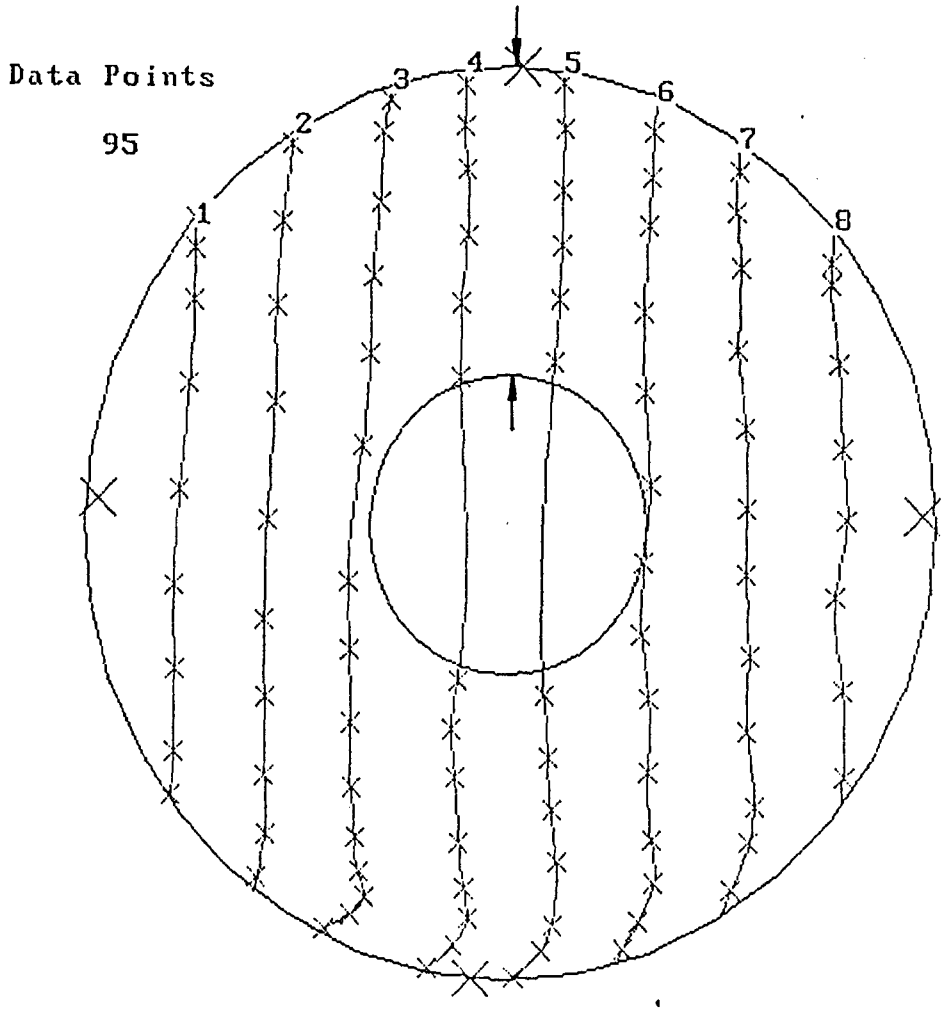

Figure 2: Tests of sputtered aluminium coating.
Direction of overlap region marked with arrow.

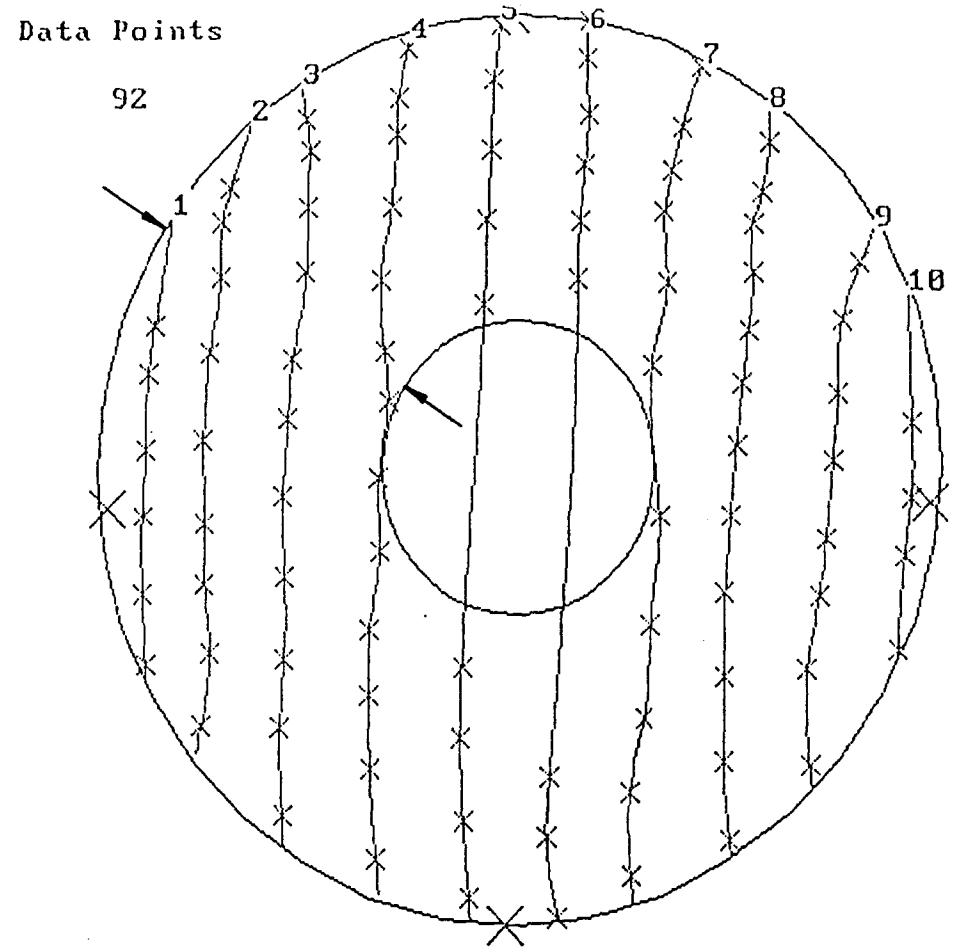

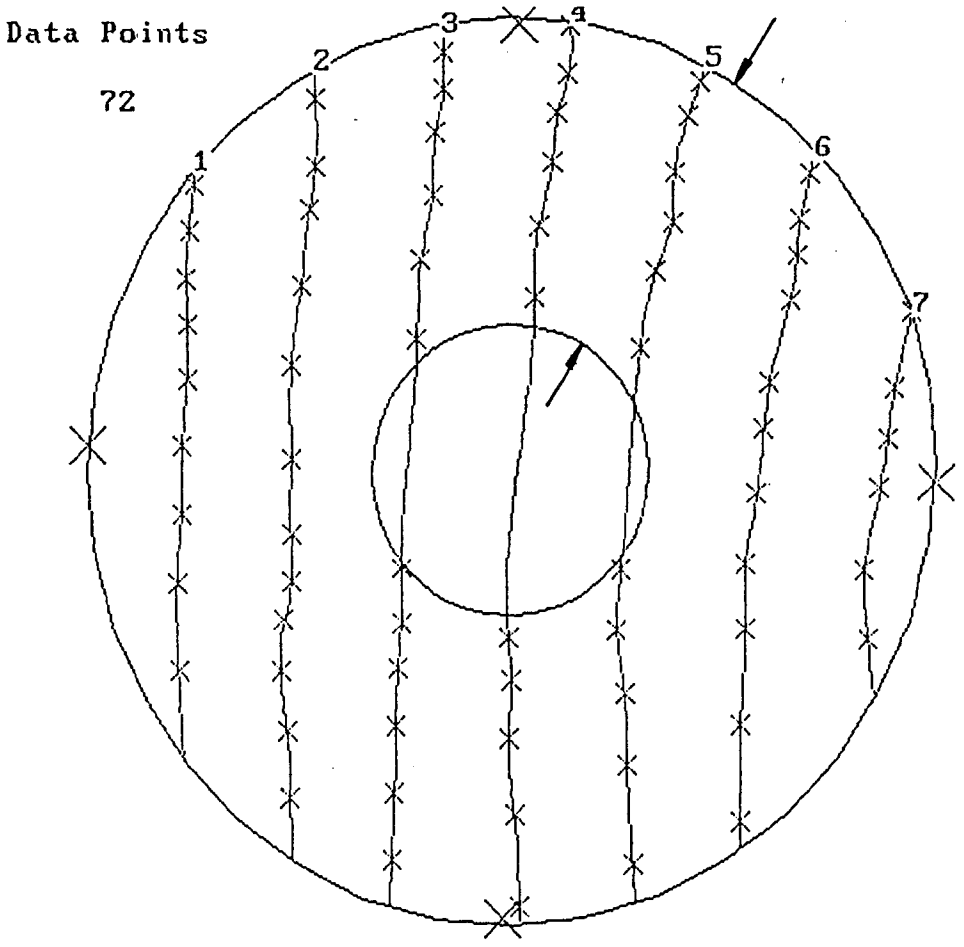

Figure 3: Tests of sputtered aluminium coating with magnetron ramp-down. Direction of overlap region marked with arrow.

EVALUATION OF COATING UNIFORMITY PRODUCED BY SPUTTERING

S.P.Worswick and A.S.Monk
RGO

A spherical surfaced mirror with a radius of curvature of approximately 250mm and a diameter of 150mm was used for this test. The mirror has a central hole, with a linear extent of one third the diameter of the mirror, which allowed the radial deposition of the sputtered coating as proposed for the 8m mirror.

The mirror surface was checked, in its uncoated state, using a scatter plate interferometer with a helium neon laser as the source of illumination. The resultant fringe pattern was photographed and analysed using WISP software. The test was set up twice with the fringes running in two directions, at 90 degrees to each other, across the mirror. The mirror surface is of good quality with localised surface deviations at the lambda/8 level and RMS deviations of 0.04 lambda (see Figure 1).

Tests of two sputtered coatings were undertaken. The first set (tested 30th May 1990) was on a coating which showed a band of reduced reflectivity at the overlap region where the sputtering source was switched on and off. The interferometer was set up with fringes running both perpendicular and parallel to this band to look for a step function or slope in the reflected wavefront which might be associated with this feature. The uniformity of the fringes limit such an effect to the lambda/8 level and the RMS values from the measurements are again at the 0.04 lambda level (see Figure 2).

The second test was of the surface produced by the sputtering run made on the 11th September 1990 when the magnetron was powered off with a ramp-down voltage. The area of reduced reflectivity was much smaller and could only just be detected under close inspection. A similar set of fringes to the previous tests were produced, again looking for distortions in the reflected wave front arising from the overlap region in the coating (see Figure 3). As with the previous test no noticeable localised fringe shifts are present and the measured RMS values are still about 0.04 lambda.

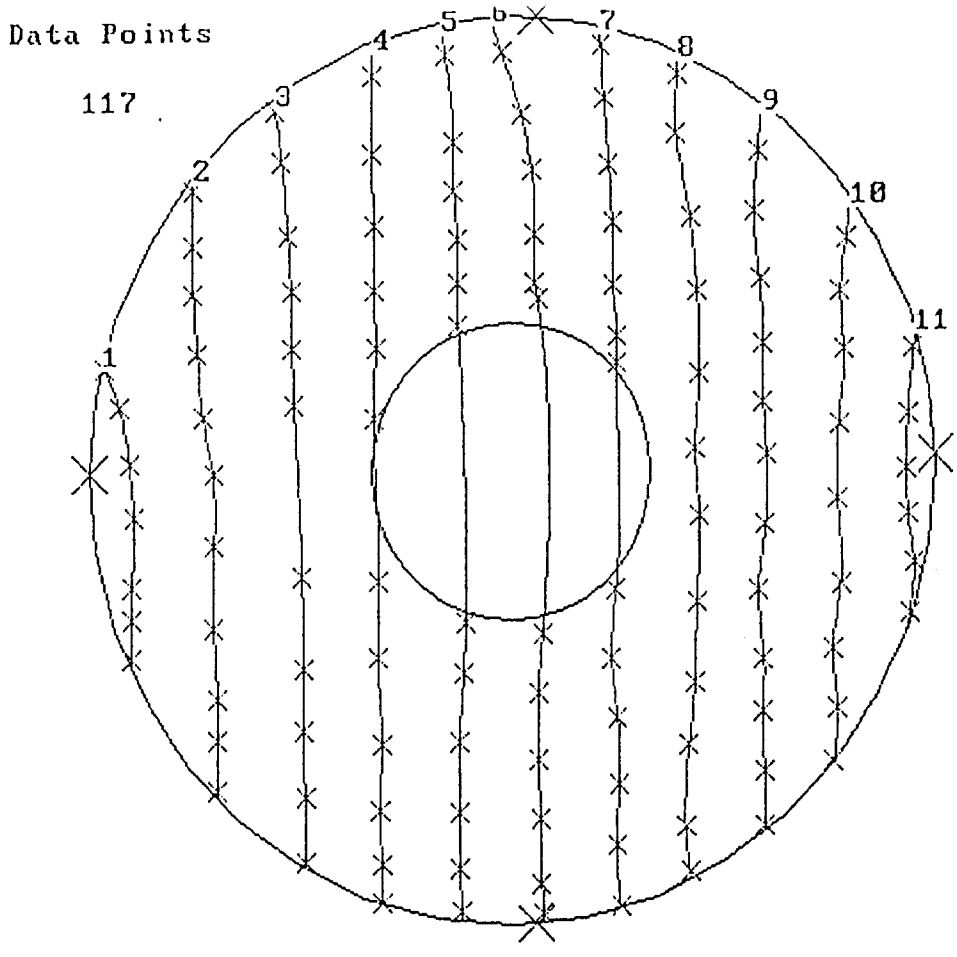

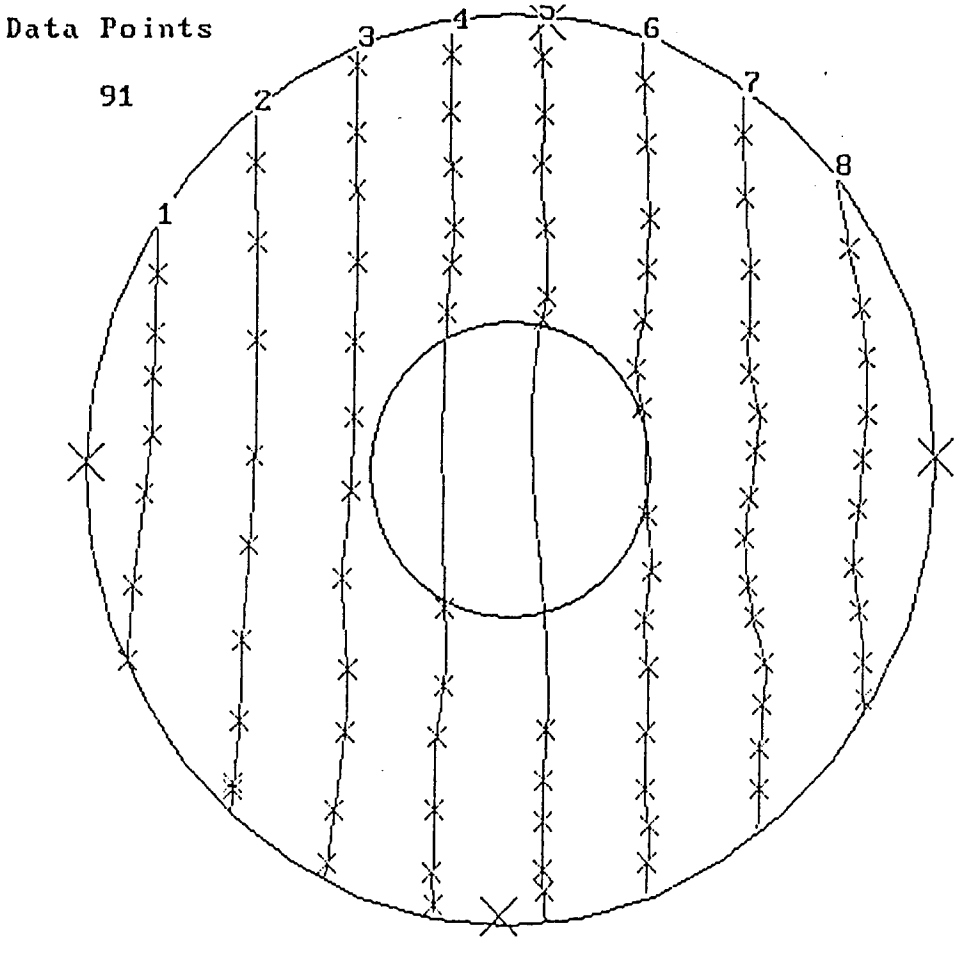

Figure 1: Tests of uncoated spherical mirror.

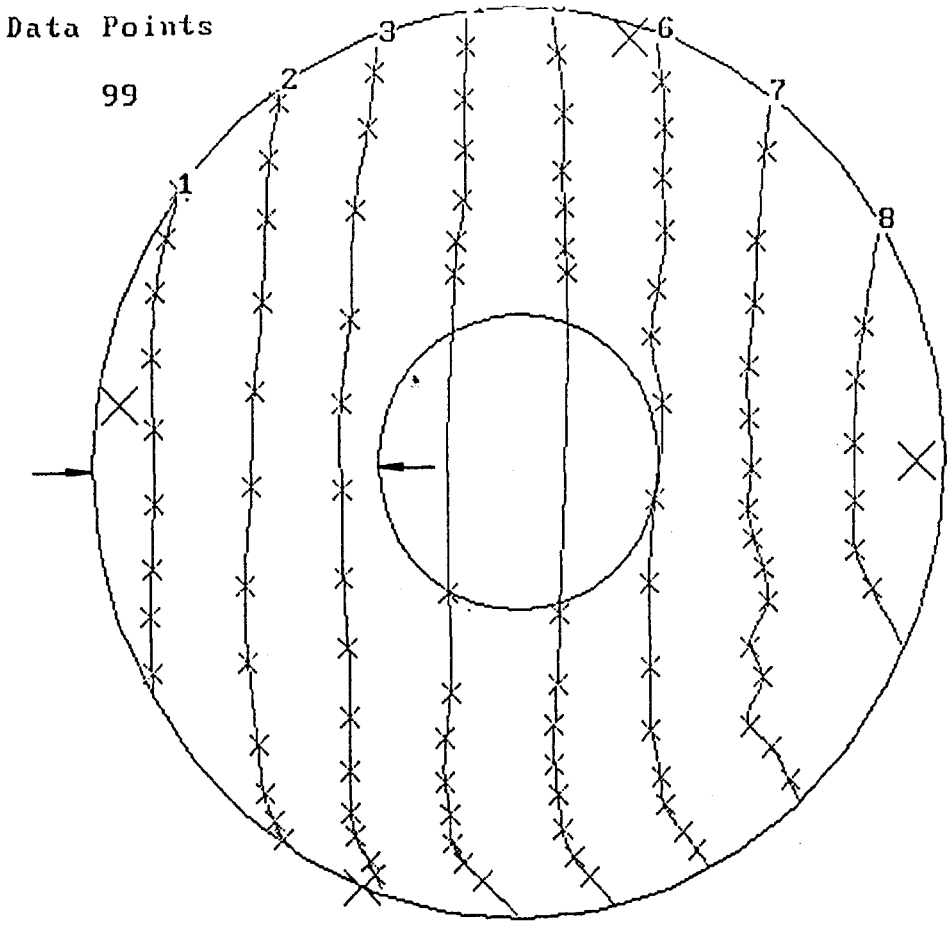

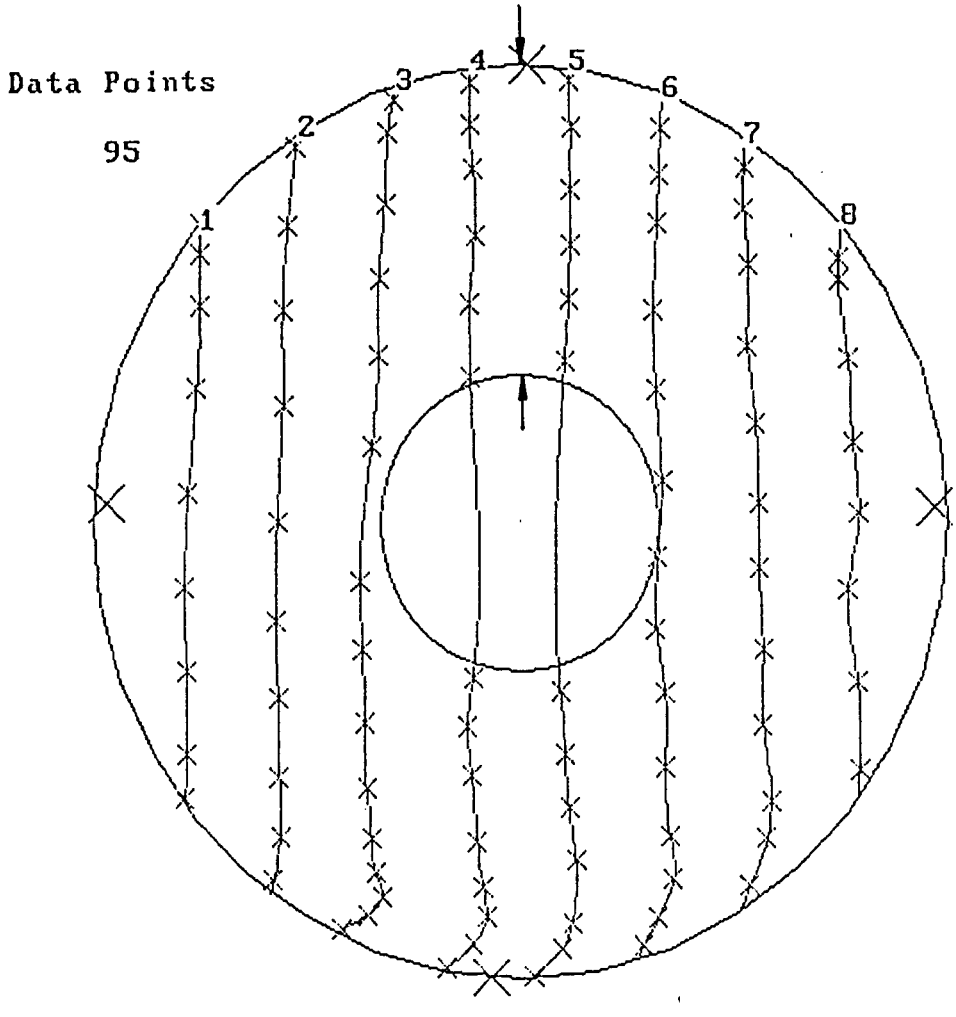

Figure 2: Tests of sputtered aluminium coating.
Direction of overlap region marked with arrow.

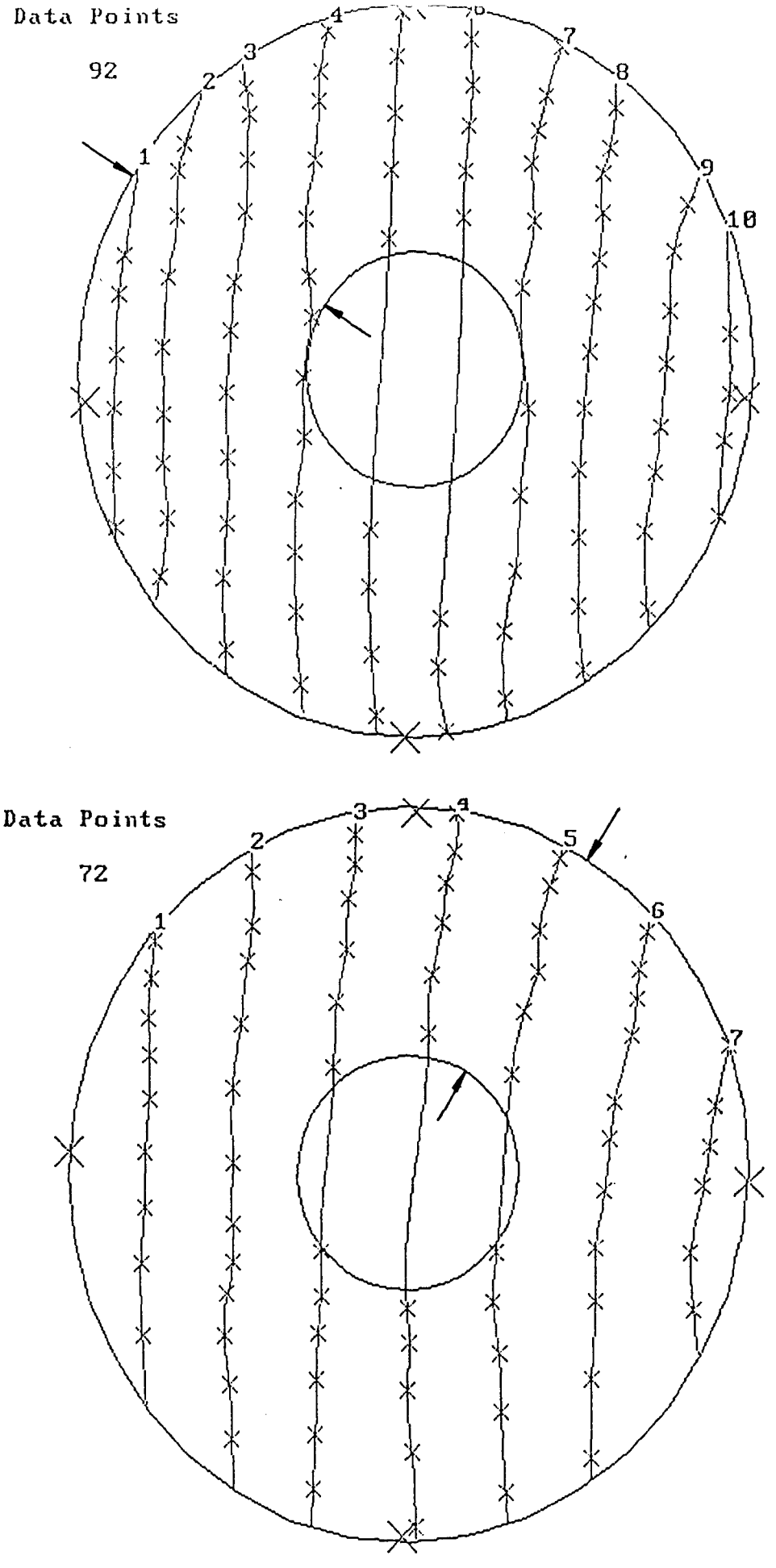

Figure 3: Tests of sputtered aluminium coating with magnetron ramp-down. Direction of overlap region marked with arrow.

Cleaning Mirrors in situ the Telescopes

Presentation by P. Giordano

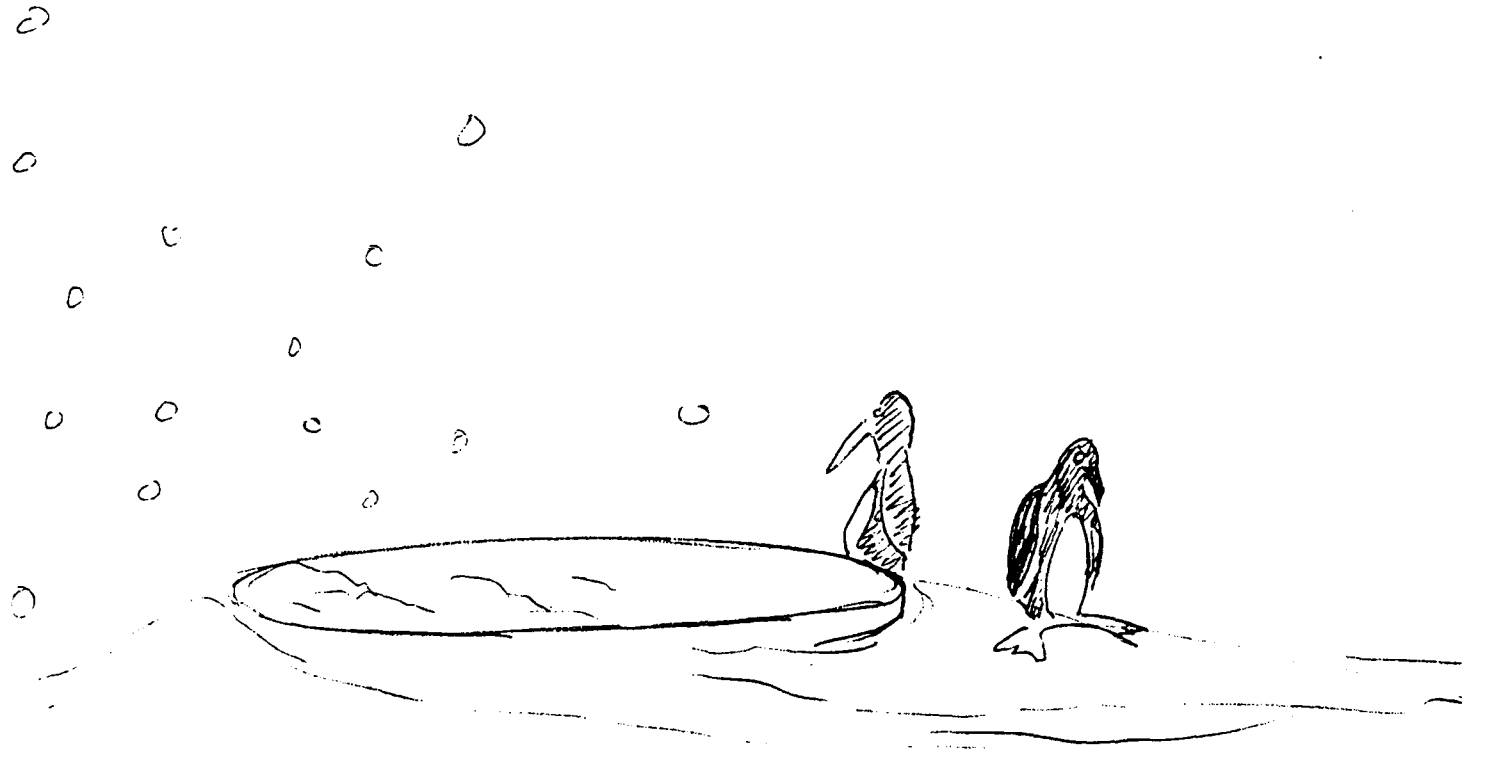

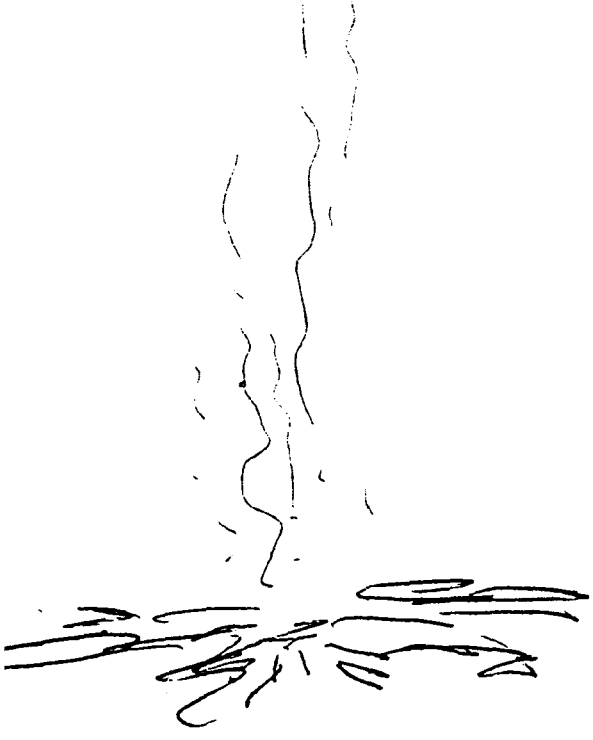

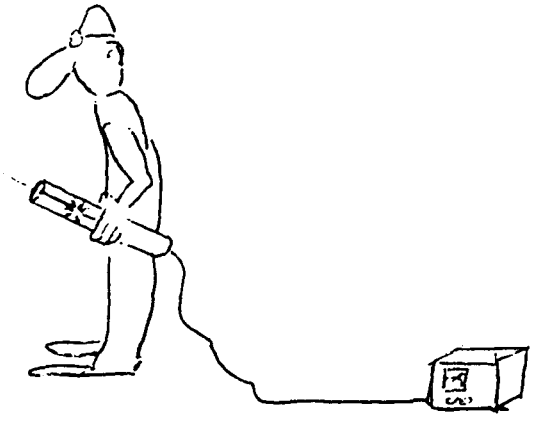

OPTICAL MAINTENANCE

1. Objectives:

- Maintain high level of efficiency
- Increase the lifetime of coatings and optical surfaces by reducing the frequency of handlings.

2. Means:

Preventive actions

Have to be developped in the conceptual phas

- Dome design (Outside - Inside) to satisfy cleanliness requirements.
- Dust tight covering of M1 and M3 mirrors
- Overpressure in the volume - clean air (dust - condensation).

Curative actions:

- In-Situ cleaning based on the CO_2 snow-flakes technique
- In-Situ and fully interporated on the Telescope.

3. <u>Dust Monitoring</u>:

- Scattering measurements
- Dewpoint meter (CO_2 Snow-flakes)
- Optimization of cleaning frequency

4. <u>Pilot project</u>:

- Installed on the NTT telescope. end of 1982.
- Manual cleaning of all the La Silla's telescopes - CO_2 Snow - periodicity 1 month.

DOC: VLT-TRE-ESO-11942-05

Date: 18 June 1991

In-situ cleaning for the VLT

1.1.1 Sensitivity

Past experience at La Silla shows that the average loss of reflectivity is of the order of 10% per surface and per year. For a three-mirrors telescope (e.g. Nasmyth) the total loss per year is estimated to be of the order of 20% (it is assumed that because of its usual orientation the secondary mirror is less affected) i.e. 1.8% per month. Therefore the reflectivity R, N months after coating, should be

$$R = R_0\, 0.982^N$$

where R_0 is the initial reflectivity after coating. The loss of reflectivity is equivalent to a reduction of the light collecting area of the telescope. The consequence on the effective diameter of the telescope is shown in the table hereafter, under the assumption that dust contamination is the only contributor to signal reduction.

Months after coating	0	3	6	9	12	15	18	21	24
Effective Diameter	8000	7790	7580	7370	7170	6980	6790	6610	6430

A loss of reflectivity of 20% after one year also means that even under good seeing conditions (0.4 arc seconds) where optical quality should be the limiting factor (and where best scientific results are expected), the dust contamination reduces the performance by the same amount as optical quality.

With a monthly cleaning procedure which would compensate for 90% the loss of reflectivity due to dust contamination the evolution of the effective diameter of the telescope would be as follows

Months after coating		0	6	12	18	24	30	36	42	48
Loss of reflectivity										
	(1)	0	10%	20%	28%	35%	10%*	20%*	28%*	35%*
	(2)	0	1%	2%	3%	4%	5%	6%	7%	8%
Effective Diameter	(1)	8000	7580	7170	6790	6430	7580*	7170*	6790*	6430*
	(2)	8000	7960	7910	7870	7830	7790	7740	7700	7660

Loss of reflectivity and effective diameter with and without in-situ cleaning procedure. (1): without cleaning; (2): with cleaning.

*without in-situ cleaning, recoating is supposed to take place after 2 years.

The conclusion is that monthly cleaning which would compensate for 90% the loss of reflectivity due to dust pollution would allow to keep the signal throughput above 92% of the ideal situation (fresh coating) with a four years interval before recoating.

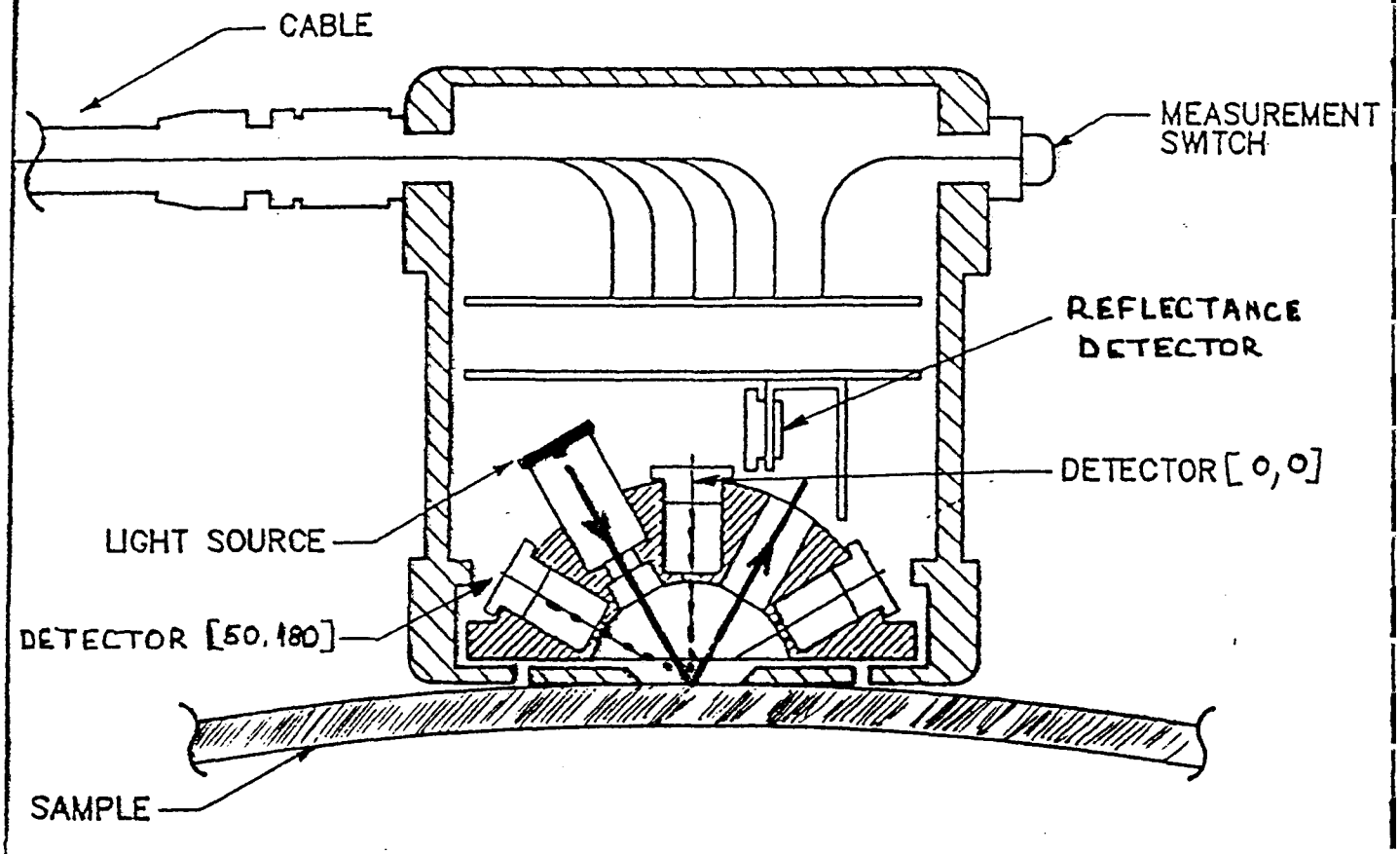

μscan scatterometer

FROM TMA Technologies

FIGURE 1 TYPICAL MEASUREMENT HEAD

TMA µScan: CO2 CLEANING TEST

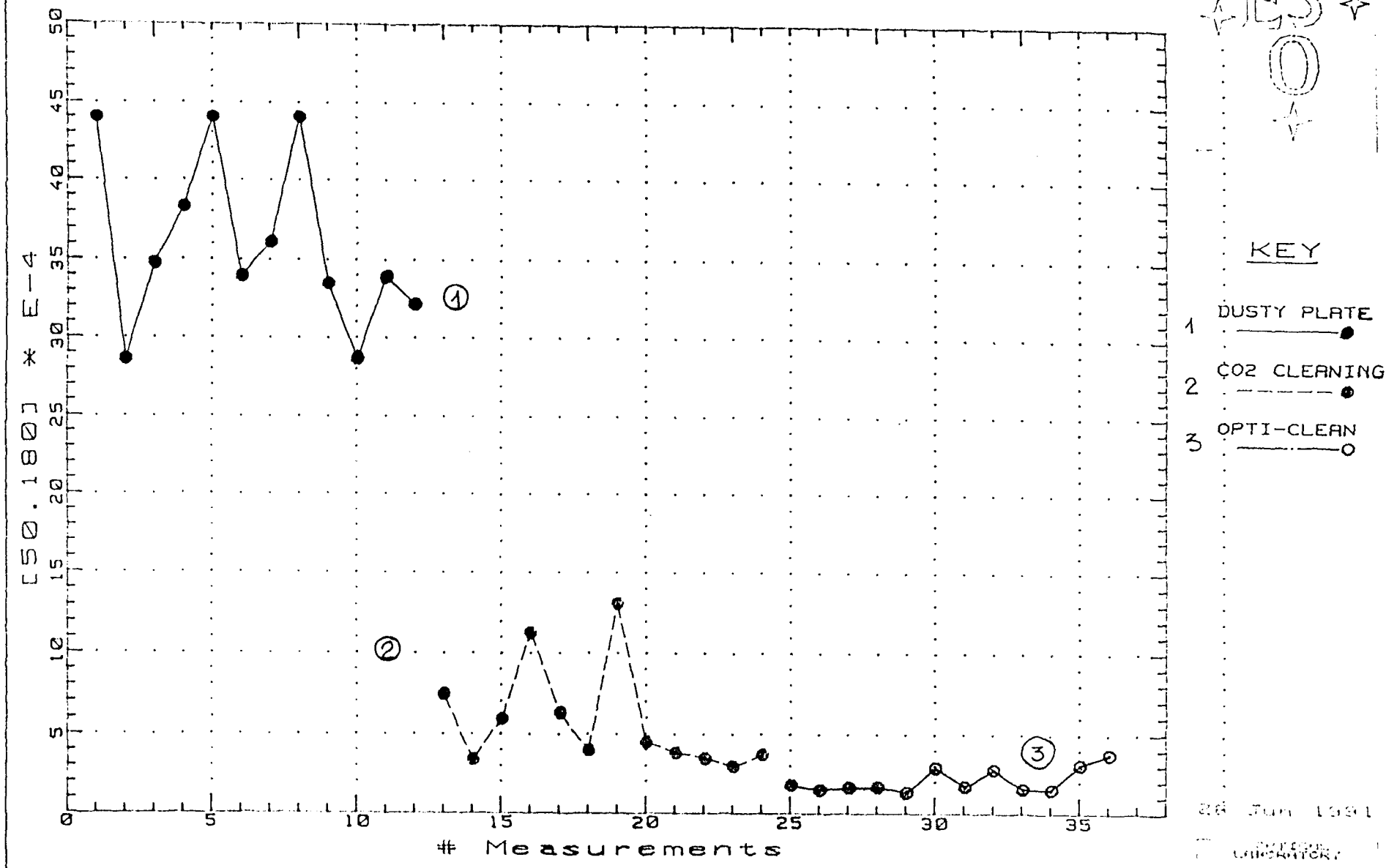

TMA µScan: TEST SENSITIVITY

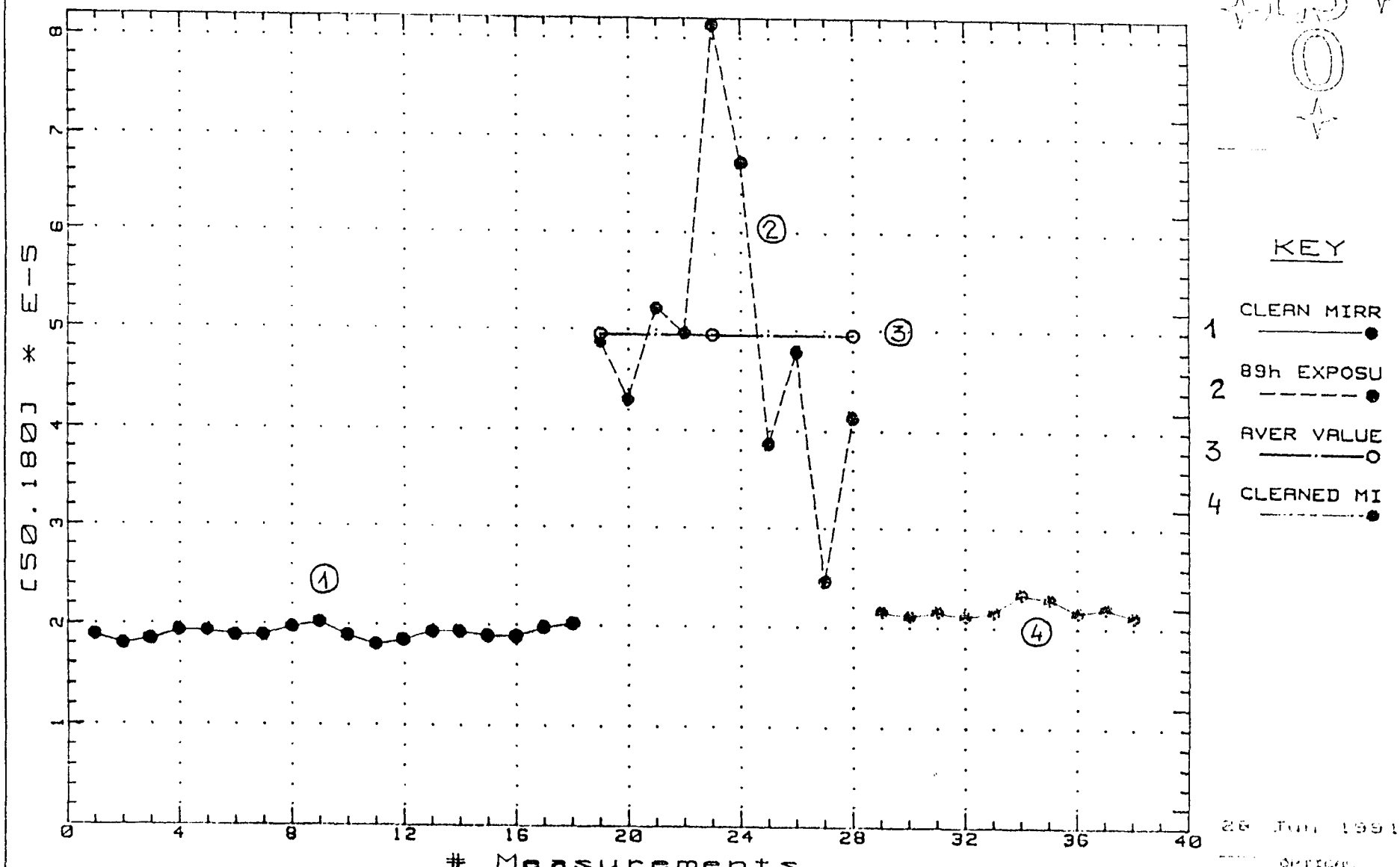

26 JUN 1991

LABORATORY

TMA μScan ... Ver 1.12 [ESO_SEN2.USN] 11:09:31 10-02-1991 Page 1

COMMENTS:
REFERENCE MIRROR MT4: Exposed 89 hours to dust pollution

SOURCE INFORMATION:
WaveLength = 670 nm Incident Angle = 25.0 degrees
RMS ROUGHNESS BANDWIDTH LIMITS:
[0.010, 1.000] 1/μm

MEASUREMENT SUMMARY:

#	0.0 0.0	50.0 180.0	(%) REFL	RMS	TIME	DATE
1	1.003E-04	4.887E-05	90.3	7.1	08:51:44	06-24-1991
2	6.335E-05	4.314E-05	91.7	5.5	08:52:01	06-24-1991
3	1.135E-04	5.239E-05	91.7	7.5	08:52:10	06-24-1991
4	5.983E-05	4.975E-05	91.7	5.4	08:52:19	06-24-1991
5	1.135E-04	8.144E-05	91.7	7.4	08:52:28	06-24-1991
6	1.126E-04	6.736E-05	91.7	7.4	08:52:52	06-24-1991
7	7.390E-05	3.874E-05	91.7	6.0	08:52:59	06-24-1991
8	1.328E-04	4.799E-05	91.7	8.3	08:53:05	06-24-1991
9	4.090E-05	2.465E-05	91.7	4.4	08:53:13	06-24-1991
10	5.119E-05	4.138E-05	91.7	5.0	08:53:20	06-24-1991

STATISTICAL SUMMARY:

	MINIMUM	MAXIMUM	**** LINEAR **** AVERAGE	STD DEV	** LOGARITHMIC * AVERAGE	STD DE
(0.0, 0.0)	4.090E-05	1.328E-04	8.619E-05	3.198E-05	8.043E-05	0.2
(50.0,180.0)	2.465E-05	8.144E-05	4.957E-05	1.560E-05	4.739E-05	0.1
REFL(%)	90.3	91.7	91.6	0.4	91.6	N/A
RMS(Angstroms)	4.4	8.3	6.4	1.3	6.3	N/A

Measurements = 10

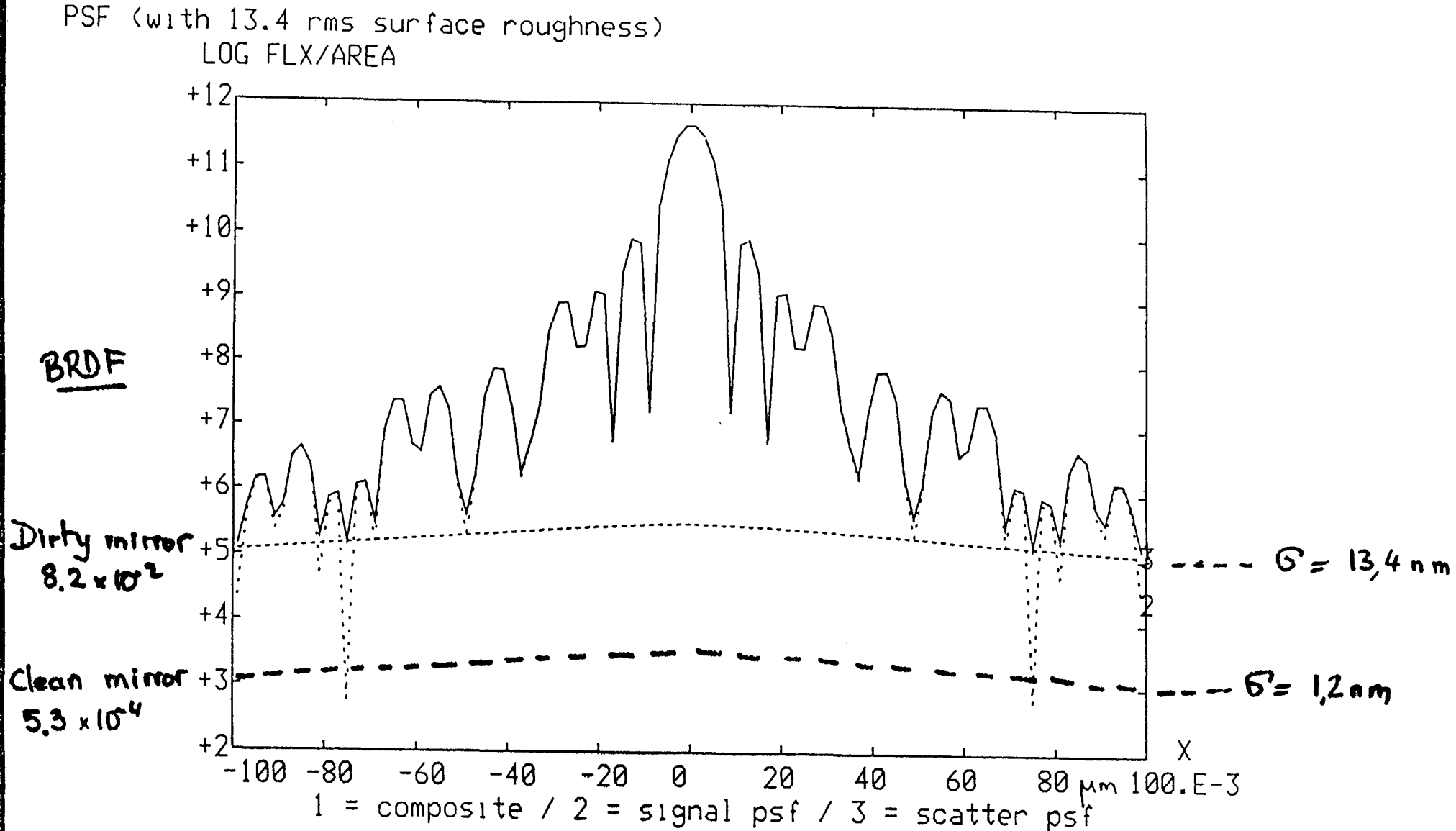

ASAP/rabet 8-OCT-91 09:20

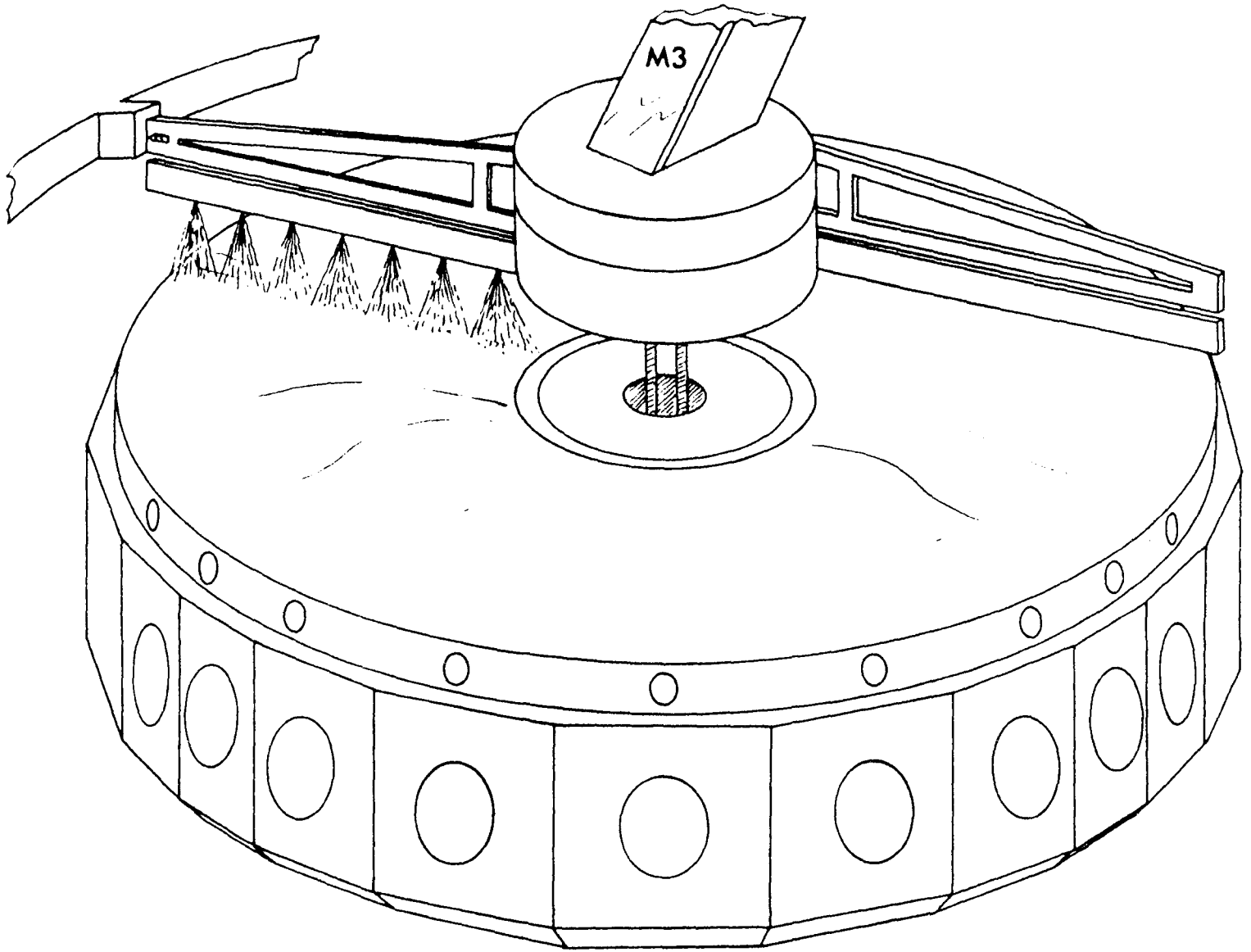
M3

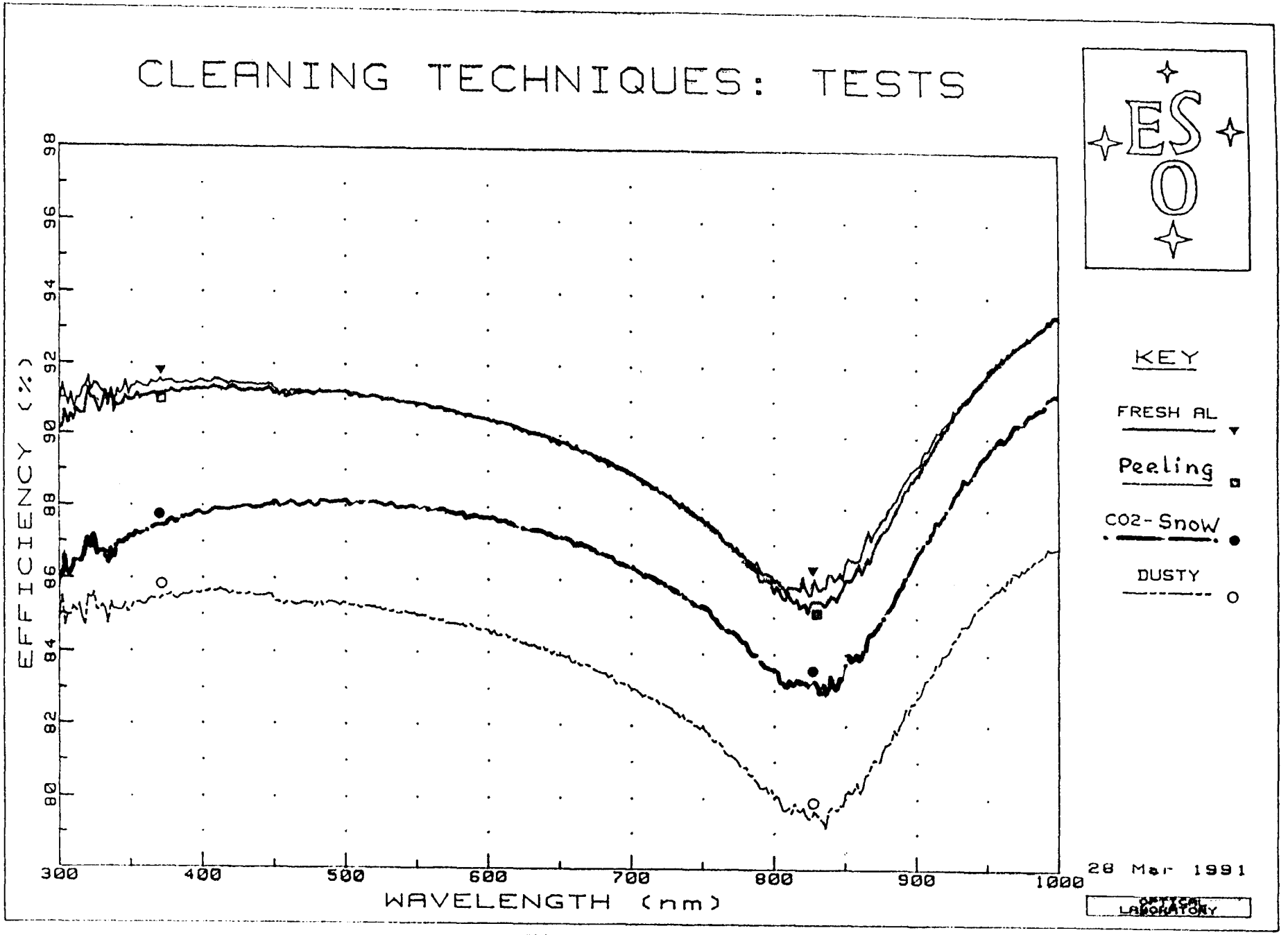
CLEANING TECHNIQUES: TESTS
ESO
EFFICIENCY (%)
98
96
94
92
90
88
86
84
82
80
300
400
500
600
700
800
900
1000
WAVELENGTH (nm)
KEY
FRESH AL
Peeling
CO2-Snow
DUSTY
28 Mar 1991
OPTICAL LABORATORY

Fig 1

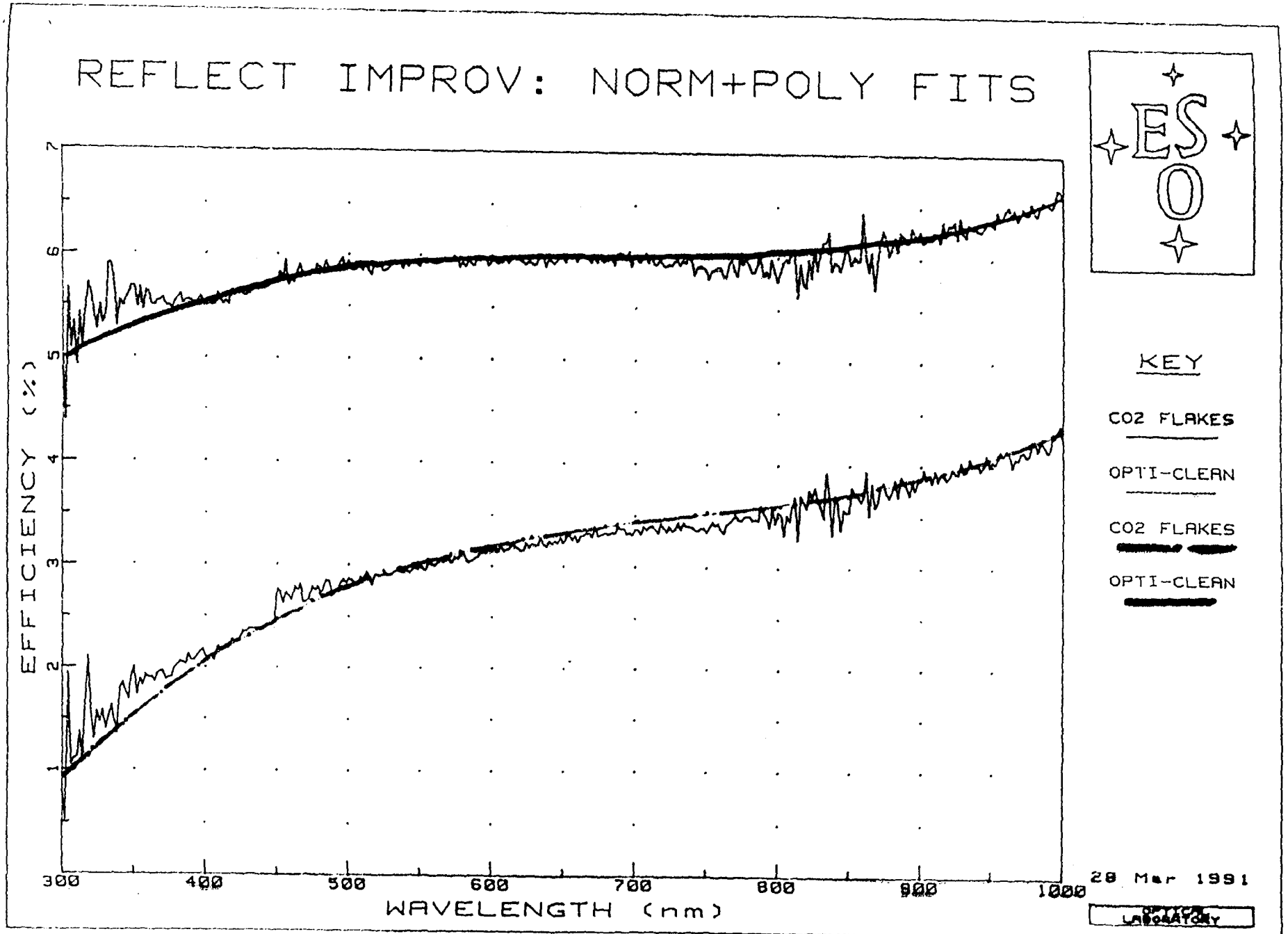
REFLECT IMPROV: NORM+POLY FITS
EFFICIENCY (%)
WAVELENGTH (nm)
300
400
500
600
700
800
900
1000
1
2
3
4
5
6
7
KEY
CO2 FLAKES
OPTI-CLEAN
CO2 FLAKES
OPTI-CLEAN
28 Mar 1991
ESO