MAIN LIBRARY

ESO

3.6m telescope
MAINTENANCE MANUAL
NUMBER 8

EUROPEAN SOUTHERN OBSERVATORY
LIBRARY

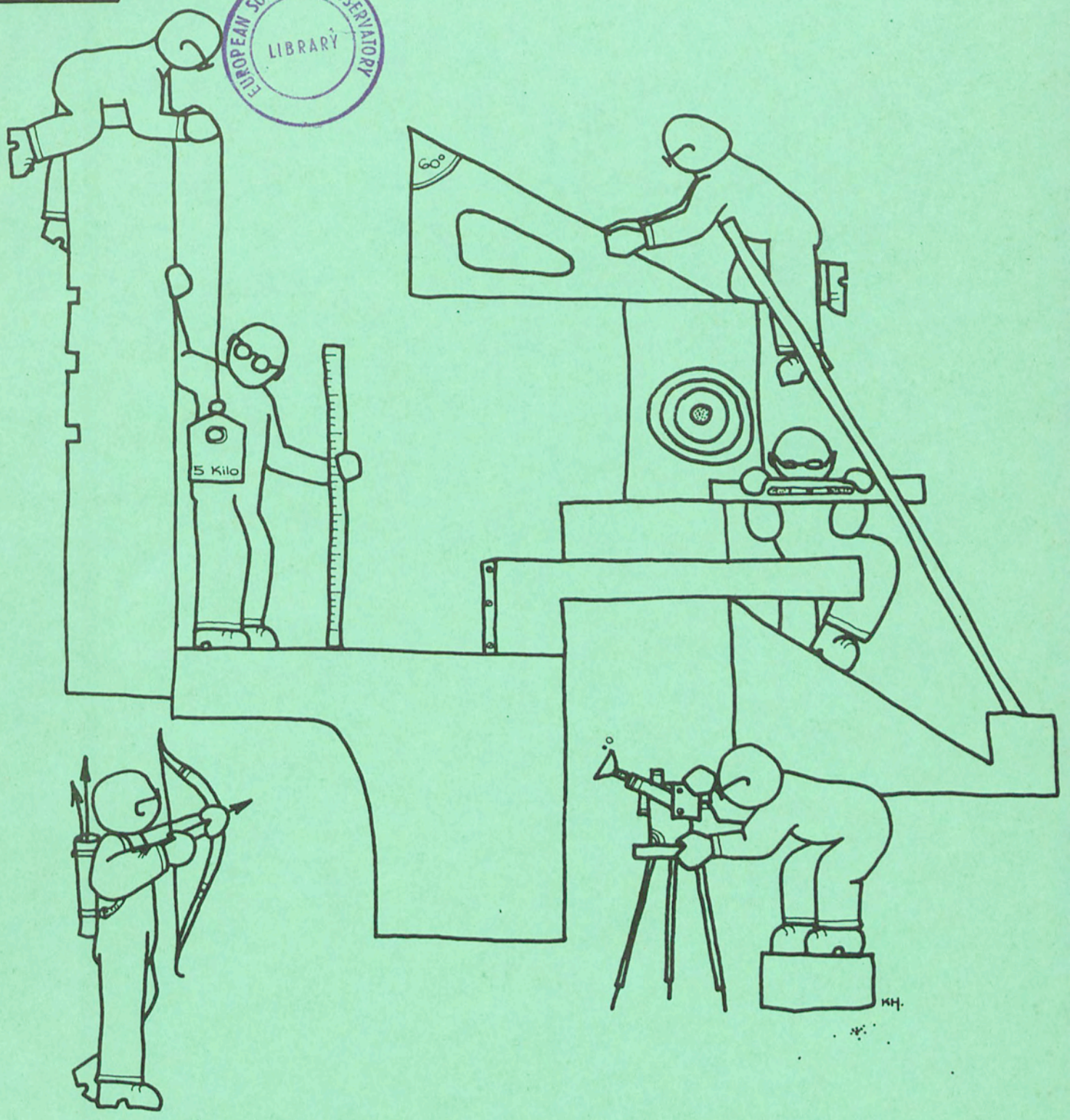

ALIGNMENT FACILITIES

Edition may 1977 D.Plathner

ESO

3.6m telescope
MAINTENANCE MANUAL
NUMBER 8

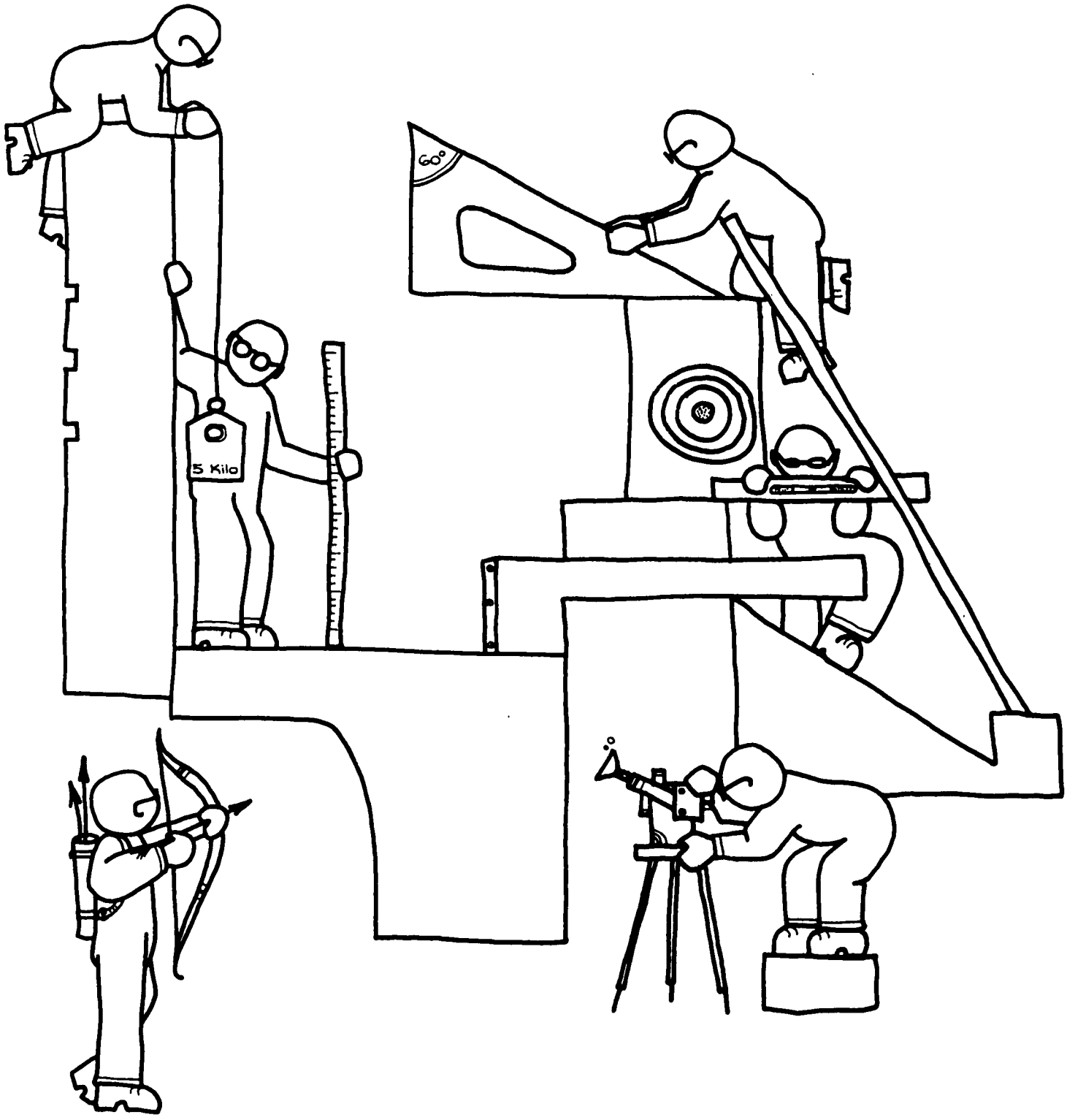

ALIGNMENT FACILITIES

Edition may 1977 D.Plathner

CONTENT PAGE

1.	Introduction	1
2.	General alignment information	1
	2.1. Sighting instrument generalities	1
	2.2. Auto-collimation	1
	2.3. Collimation	2
	2.4. Auto-reflection	3
	2.5. Setting of targets and mirrors	3
3.	Technical details of alignment facilities	4
	3.1. Sighting telescope	4
	3.2. Equipment for sighting telescope	7
	3.3. One-second theodolite	13
	3.4. Equipment for theodolite	15
	3.5. Targets + target holders	17
4.	Alignment procedures	20
	4.1. Instrument pole	20
	4.2. Perpendicularity of alpha and delta axis	21
	4.3. Perpendicularity of delta and tube axis	23
	4.4. Mirrors and top units	24
5.	Maintenance instructions	26
6.	Annex	29

1. Introduction

This manual mainly gives operation instructions and descriptions of the alignment facilities and instruments available for the 3.6 m telescope.

In the second part alignment procedures are indicated which are necessary to bring the telescope into proper position for its optical performance.

As most of the alignment equipmentasks for shop adjustment at the deliverer's due to their high quality optical performance maintenance information is limited to lamp exchanges and level adjustments.

2. General alignment informations

In this chapter details are given which are of interest for the general alignment practice.

2.1. The optical alignment instruments which will be described in this manual have:

- upright images
- metric scales
- 360° readings
- no common voltage for the illumination facilities
- autocollimation equipment.

2.2. Auto-collimation is the most precise optical method to check the squareness of a mirror to the line of sight.

The sighting instrument (theodolite or alignment telescope) is focused at infinity. The rays of light are, therefore, collimated (parallel) and can be reflected back along their own path forming an

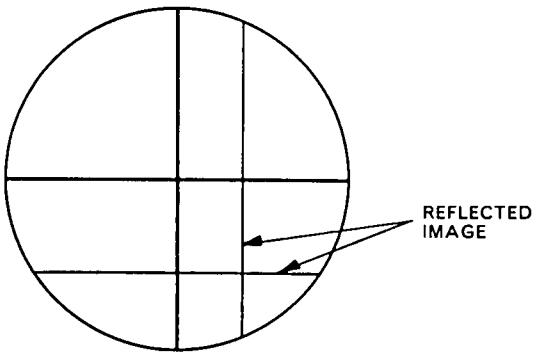

Fig. 2.1. Auto-collimation image

image of the crosslines in the plane of the installed crosslines themselves.

If the mirror is tilted, the image of the crosslines is displaced (fig. 2.1.)

The method can only be used to check squareness, not to measure tilt.

If measurements are necessary one has to install a collimator in the line of sight instead of a mirror.

2.3. The collimator is a device for projecting parallel rays of light. Basically it consists of a collimating lens, a lens set at the focal plane of the lens and means for illuminating the target. When the collimator is viewed by the sighting instrument an image of the tilt target (fig. 2.2) is seen when the instrument is focused at infinity, irrespective of the actual distances. Also the size of the image is constant, but intensity and constrast change.

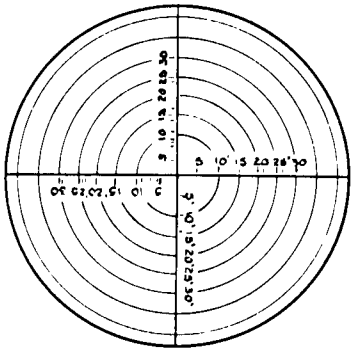

Fig. 2.2
Tilt target

When the axis of the sighting instrument is parallel to the axis of the collimator, the target is seen centered on the crosslines, even if the axis of the two instruments are not aligned. If the collimator is tilted however, the target appears off-center and the tilt can directly be read in minutes of arc.

A second target called displacement target (fig. 2.3.) is printed on the cover glass and is used for measuring displacement of the collimator axis from the sighting instrument axis. The instrument is then focused on that target, so one does not interfere with the others, provided that the distance is less than 20 meters.

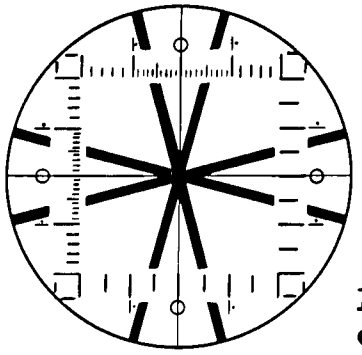

Fig. 2.3. Displacement target

2.4. The faster but less accurate method of auto-reflection can be used by instruments equipped with lateral micrometric displacement possibilities and an illuminated target (fig. 2.4.) on the cover glass of the instrument. When the mirror is tilted with respect to the instrument line of sight, the image of the target appears to be offset from the cross-lines. The figures on the target indicate gradient in millimetres per meter when the mirror is placed one meter from the sighting instrument.

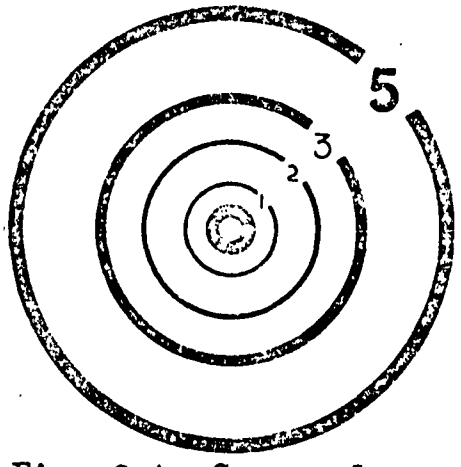

Fig. 2.4. Cover glass Target

The gradients at the mirror-to-instrument distances are proportional.

Gradient= circle value/distance instrument mirror.

A conversion table for gradients expressed in arc seconds is given in table I of the annex.

2.5. To set targets or mirrors on the axis of the 3.6 m telescope is extremely difficult due to the big diameters and mainly due to the limited possible angles of rotation.

A method has, therefore, been developed which permits to set targets and mirror asking for a rotation through 90 degrees.

This method is, however, only valid under the assumtion that for a certain rotation there will only exist one axis, i.e. excentricity effects are zero.

One sets a target in the estimated center of rotation and aligns a sighting instrument with micrometer reading to the target. The instrument is mounted to the stationary part and thus does not rotate with the target.

After a rotation through 90 degrees one reads the position of the target with the sighting instrument and plots the displacements into an x-y coordinate system (see fig. 2.5.).

The intersection of the mid-perpendicular with the circle over the connecting line between the two points is the center of rotation.

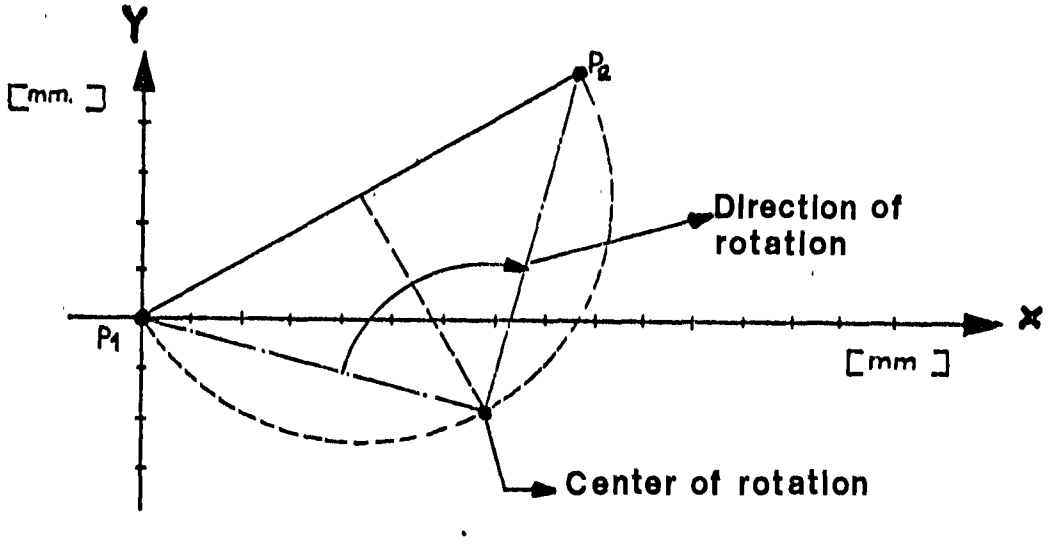

Fig.2.5

The decision between the two possibilities is given by the direction of rotation.

Although one measurement should theoretically be enough it is in practice necessary to repeat it two or three times to eliminate reading errors and increase accuracy.

The same method can be applied for setting mirrors square to the line of sight by working in auto-reflection. As the distance is in this case however, dobbled the measured values have to be divided by two before plotting.

3. Technical details of alignment facilities

After having given some information on the techniques to be used for the alignment of the 3.6 m telescope the following chapters will give details about the instrument facilities available.

3.1. Sighting telescope

The simplified general arrangement of the sighting telescope is illustrated in the frontispiece (fig. 3.1.). The objective lens is the main light-gathering component of the optical system. This, together with the focusing lens, produces an inverted real image somewhere in the area that includes the plane of the crosslines. Movement of the focusing lens allows the image to be brought accurately into the plane of the crosslines - which is the correct working condition.

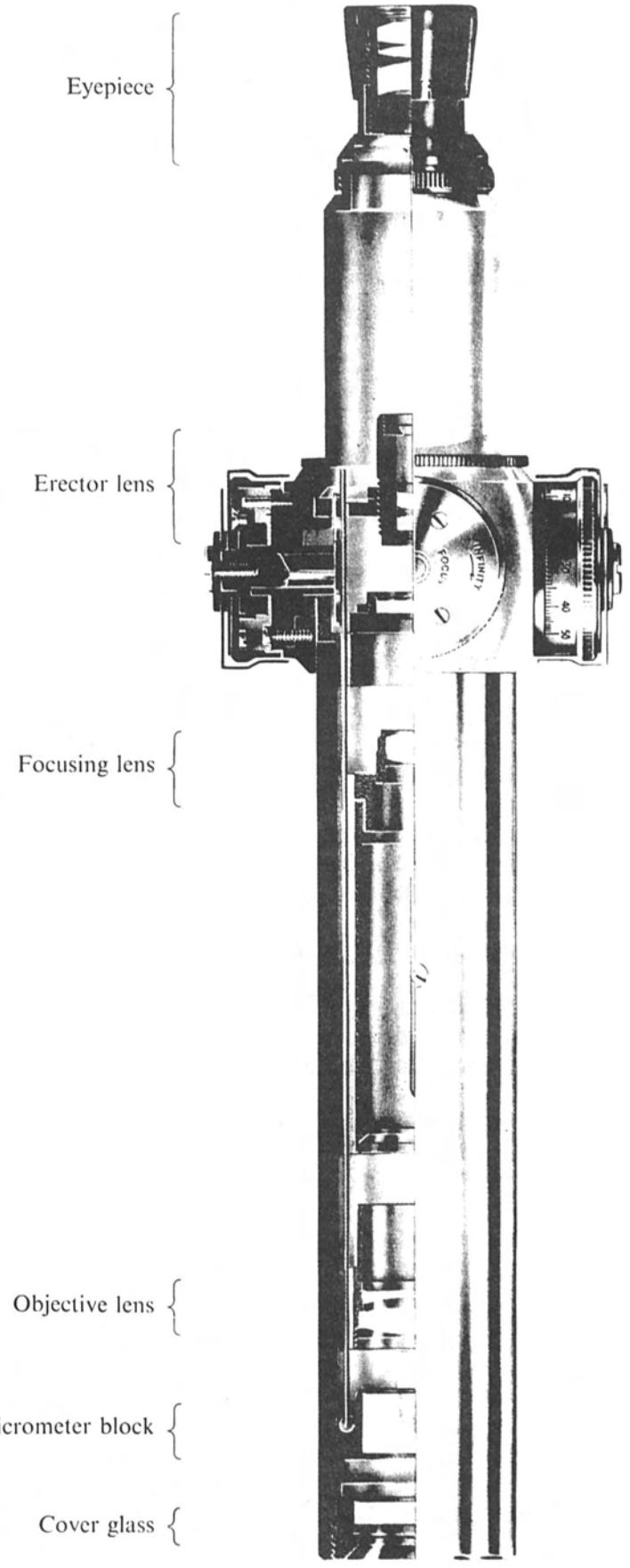

Fig. 3.1 Frontispiece of sighting telescope

The erecting lens serves to reverse the already inverted real image formed by the objective lens, so that the final image seen by the observer is an erect one.

The eyepiece provides the chief magnification of the system and also serves to form a virtual image of the crosslines and superimposed target at a suitable distance from the eye for easy viewing.

The optical micrometer is a glass block with accurately parallel faces, which is mechanically linked to the micrometer drums. A light ray passing through the micrometer block when it is normal to the ray is not affected, but if the block is inclined the emerging ray is still parallel to the line of the incident ray but is displaced from it. The pivoting axes of the micrometer block are at right angles, so the horizontal and vertical movements of the image are also at right angles.

The micrometer block is protected by a cover glass, the inside face of which carries the target pattern used in auto-reflection.

The graduated focusing knob varies the position of a tube which carries the focusing lens enabling targets to be focused from zero to infinity.

Specification of sighting telescope

- Magnification: x 34 at infinity focus (standard eyepiece). The variation of magnification is given in chart I of the annex.

- Focusing: range zero to infinity.

  Accuracy of focus scale ± 10% of marked value

- Micrometer: range ± 1.2 mm
  Graduations 0,02 mm apart

  Accuracy 0.003 mm + 2% of displacement; axes of micrometer parallel to their respective crosslines to within 20 minutes. A click-stop indicates zero reading. The micrometer can be locked at any setting or locked to limit the range over which they can be moved.

- Cover glass target is concentric with tube to within 0.025 mm.

- Crosslines are at right angles to each other within 5 minutes.

- Field of view for distances up to 3 m is given in table II in the annex. For longer distances it is shown in the chart II of the annex.

- Locating tube outside diameter 57,137 -57,145 mm Cylindrical within 0,005 mm.

  Tube length nominal 254 mm.
  Overall length with straight-through eye-piece 448 mm nominal.

- Weight 4.5 kg approx.

- Accuracy of reading $\pm$ 0.05 mm at 30 m and proportionally for longer and shorter distances down to 3 m. Below this distance the errors are less than the precision with which the micrometer can be read.

3.2. Equipment for sighting telescope

- The eyepiece has a magnification of x 34. It is adjustable for focus and is scaled in dioptres.

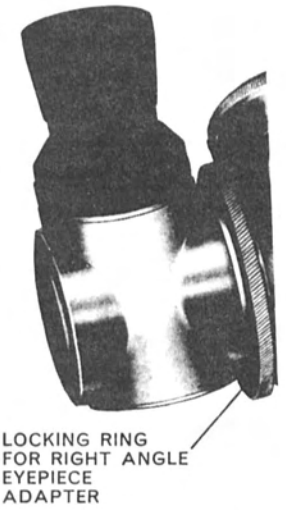

Fig. 3.2 Right-angle adapter

The eyepiece can be removed from the telescope by unscrewing it. To facilitate using the telescope, a right-angle eyepiece adapter (fig. 3.2.) is available. To fit this, unscrew the eyepiece from the telescope and screw it into the adapter. Unscrew the straight eyepiece adapter and then secure the right-angle adapter in its place by means of the locking ring, setting the eyepiece at a convenient angle for viewing.

- The lamphouse for auto-reflection and auto-collimation is inserted into the telescope and illuminates the crosslines and cover-glass target. The power supply comes from a 4-volt transformer which goes with it.

The typical way for use is shown in fig. 3.3 which gives the schematic diagram of a auto-reflection setup.

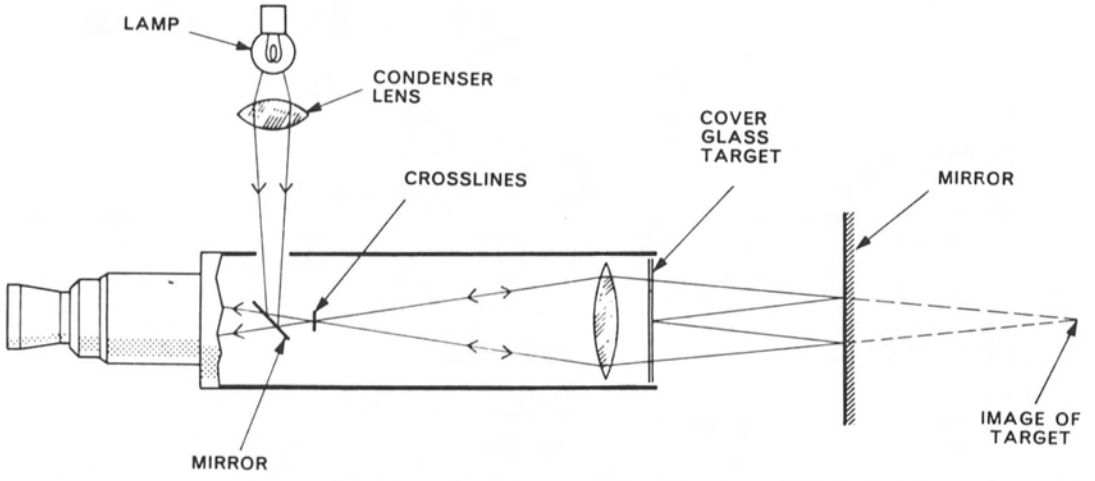

Fig. 3.3 Schematic diagram showing Telescope Lamphouse used for auto-reflection.

The lamphouse comprises a source of illumination with screw adjustments for focusing and centering the lamp filament (see maintenance instructions), and a partially-reflecting mirror. A green filter carried on a cross-slide can be brought into use and it is unwise to look through the eyepiece unless the filter is in position.

The socket for the lamphouse is diametrically opposite the focusing knob of the telescope and is normally equipped with an adapter sleeve.

When the lamphouse is not installed the hole in the sleeve should be closed by the cover retained in the telescope by a ball catch.



To insert the lamphouse into the telescope remove the protective sleeve covering the mirror and locate the screw head on the mirror stem in the slot in the adapter sleeve (Fig. 3.4). Push the lamphouse inwards until the screw head enters a spiral slot then turn clockwise until it is held by the ball catch.

Fig. 3.4 Telescope Lamphouse

The glass reflector is extremely thin and should never be touched. If cleaning is required, wipe very carefully with a lint-free cloth.

- The collimator

It is shown in fig. 3.5 and a detailed description can be found in chapter 2.3. A buble level is included to assist setting the target parallel to a crossline.

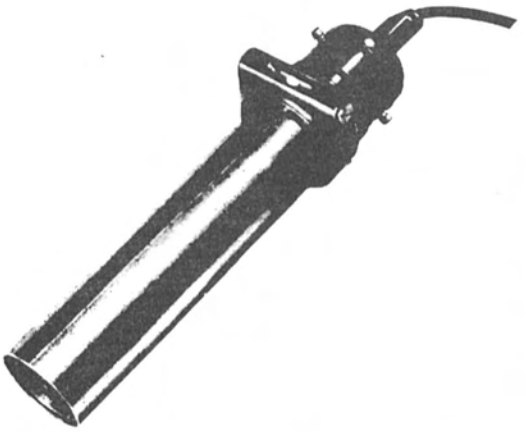

Specification of collimator

Lamp: 12 V from existing transformer; outside diameter of tube 57,137-57,145 mm. Optical axis parallel to outside tube within 3 arcsec. Target concentric with circumference of tube to within 0.008 mm.

Focal length 21.5 cm
Weight 3.15 kg.
Overall length: 31.5 cm

Fig. 3.5 Collimator

For replacement of lamp see maintenance instructions.

- Pentaprism

It consists of the optical square and an adaptor (Fig. 3.6) which permits to fit the unit to the telescope or to a separate tube for independant installation.

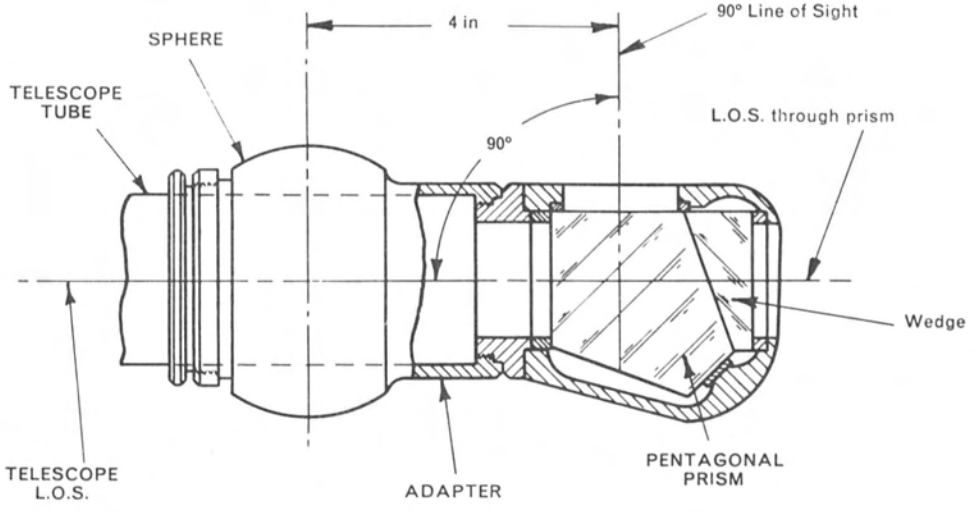

Fig. 3.6 Four-inch Offset Optical Square.

The combination - here called pentaprism - allows the right-angle line of sight to be swept through 360° clear of obstruction.

The right angle line of sight offset from center of sphere is 4.00 inches ± 0.001.

Accuracy of 90° angle ± arcsec i.e. 0.005 mm per metre.

- <u>The stride level</u>

It is a bubble level which is mounted on the telescope tube astride the mounting sphere (fig. 3.7). The construction of the level and the optical arrangements for reading it permit the telescope tube to be set horizontal to within 2 seconds. To obtain this accuracy two conditions must be satisfied: the vial must be both parallel to and vertically above the axis of the telescope.

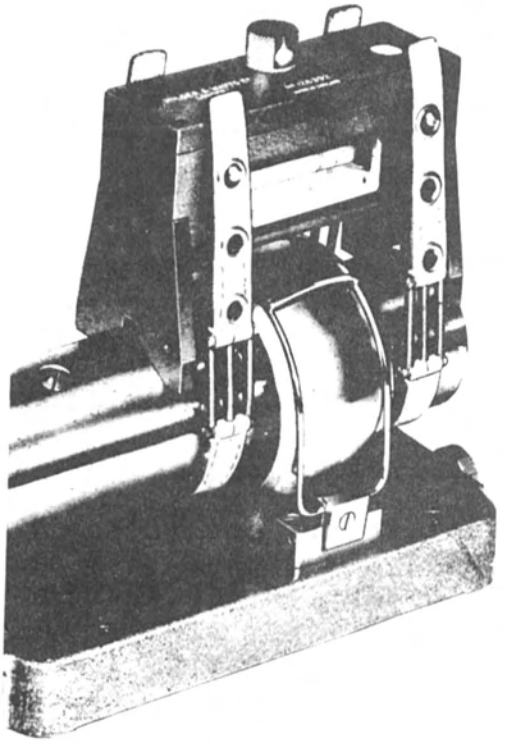

3.7 Stride Level

The vial is illuminated through the windows at the side of the level and the ends of the bubble are viewed through the prismatic system at the top. If the telescope is almost level, half of each end of the bubble will be seen as in (a) or (b) of figure 3.8. When the telescope is perfectly level, the two images coincide as at (c). If the images are not symmetrical about the center line as in (d), the vial is not vertical over the telescope axis.

To check and adjust the vial see maintenance instructions.

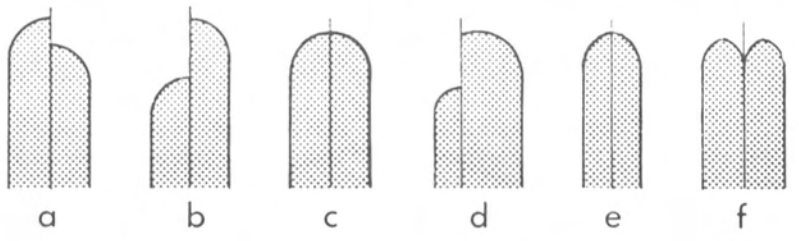

Fig. 3.8 Views of Stride Level bubble
(a) and (b) Bubble not in coincidence (c) Condition of coincidence
(d) Vial not vertically over Telescope (e) and (f) Vial not parallel to Telescope axis.

- Mountings

A bore fixture is available which permits to mount the telescope concentric with the axis of a bore (fig. 3.9).

To mount the fixture in a bore or on a surface an adapter is required. Details for a suitable plate are given in fig. 3.10.

The bore fixture is equipped with an adjusting bracket holding two perpendicular adjusting screws and a clamp. The clamp is spring-loaded and is arranged to hold the telescope firmly on the adjusting pads. It is, however, not strong enough to take the weight of the telescope so that it has to be pressed into the pads if one works in odd positions.

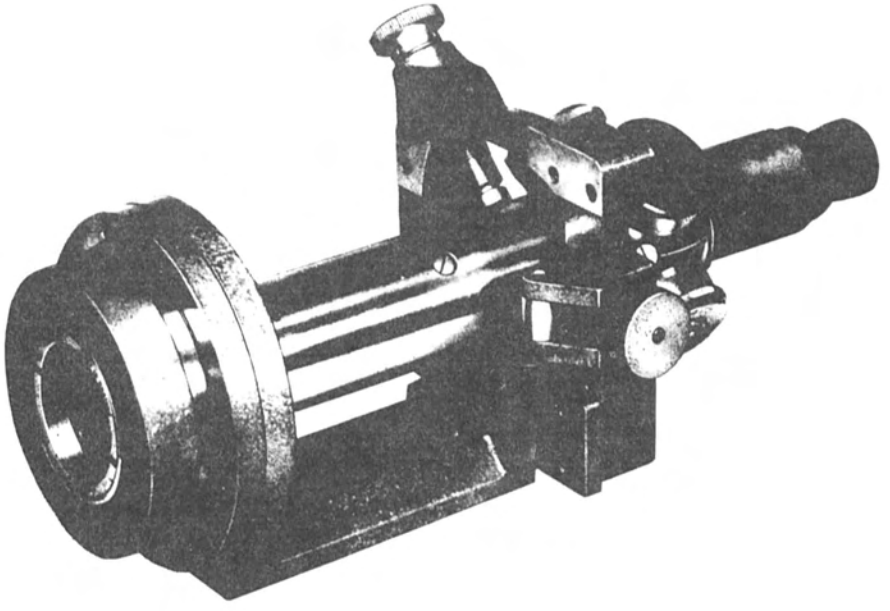

Fig. 3.9 Telescope in Bore Fixture

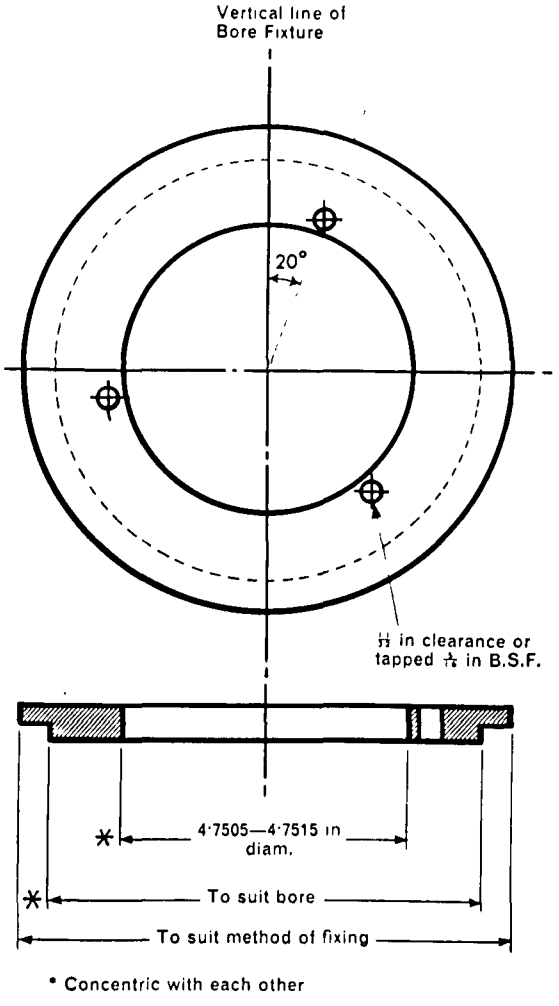

Fig. 3.10 Adapter plate for Bore Fixture

Besides the bore fixture a clamping flange is available which does not permit any adjustment but is convenient when installing for instance the collimator.

3.3. One-second theodolite

The instrument is shown in figures 3.11 and 3.12. It is composed of four parts.:

- The tribach is the base of the instrument. It has three footscrews (3), used for setting the standing axis vertical, and an optical plummet (4) for centering over ground points. The base plate (1) has a central thread. The spring plate (2) presses the footscrews into the base plate. The circular level (24) allows approximate levelling and together with the optical plummet is used for levelling and centering the tribach.

  The three studs (28) on the base of the instrument pass through holes in the tribach and, when the arrow of the swivel locking knob (27) points downwards, the studs are engaged and the instrument is locked in the tribach. When the knob is turned so that the arrow points upwards the instrument can be lifted out of or placed in the tribach.

- The lower part contains the cylindrical standing axis system and the horizontal axis. The axis sleeve is connected to the centering flange and studs (28) which fit into the tribach

  The axis stem rotates inside the sleeve. For setting the circle, the horizontal circle carrier can be rotated around the axis sleeve by turning the circle drive knob (37) which is protected against unintentional use by a cover (38). A mirror (6) is opened for illumination of the horizontal circle and can be replaced by a plug-in lamp.

  Left of the mirror is a socket, the input point for the internal wiring of the instrument, to which a battery box (see equipment) can be connected for illuminating the circles and reticle.

- The upper rotable part of the instrument is called the alidade. Its main parts are the standards, the vertical circle (13), the tilting axis with the telescope, the circle reading optics, the plate level (22) for setting the standing axis vertical and the index level. By tightening the horizontal (29) and vertical (11) clamps, the instrument can be clamped with the telescope pointing in the required

direction and the horizontal (23) and vertical (9) drives are used for fine pointing the telescope to a target.

One standard holds the vertical circle (13) and its index level, which is centered by turning the index level setting screw (30) until the ends of the split bubble are seen in coincidence in the prism (10). Coincidence indicates that the reading system for the vertical system is plumb. An illuminated mirror (12) which can be replaced by a plug-in lamp, is located on the outside of the vertical circle housing.

The other standard holds the micrometer knob (16) which is turned to set the images of the diametrically opposed circle graduations in coincidence, and the selector knob (21) for selecting which circle is to be read in the eyepiece (19) of the reading microscope.

- The telescope is short and transits at both ends. The eyepiece (20) is rotated for focusing the reticle and has a dioptric scale to allow immediate setting to suit an observer's eyesight. A bayonet ring (33) holds the eyepiece in position. After a slight left turn of the ring the eyepiece can be replaced by a diagonal eyepiece, autocollimation eyepiece or eyepiece lamp.

  The telescope is focused by turning the sleeve (17), which has engraved arrows to indicate the turning direction to infinity. When using electric illumination equipment for sight work, the knob (15) is turned so that light from the vertical circle lamp is reflected off a mirror inside the telescope towards the reticle. The brightness of the field of view illumination is varied according to the position of the knob. Immediately beside the telescope eyepiece is the reading microscope eyepiece (19) which is turned for focusing the circle and micrometer images.

  For more detailed instructions for use see the booklet of WILD T2E Universal Theodolite.

Specification of theodolite

- Magnification	x 28
- Clear objective aperture	40 mm
- Field of view at 1000 m	29 m
- Minimum focusing distance	2,2m
- Multiplication constant	100
- Additive constant	0
- Plate level sensitivity per 2 mm run	20 arc sec
- Index level sensitivity per 2 mm run	30 arc sec
- Circular bubble sensitivity per 2 mm run	8 arc min
- Circle glass	360°
- Horizontal circle diam. of graduations	90 mm
- Vertical circle diam. of graduations	70 mm
- Graduation interval of circles	20 arc min
- Smallest scale interval of opt. micrometer	1 arc sec

3.4 Equipment of theodolite

- The auto-collimation eyepiece as shown in fig. 3.13 is inserted in its place after having turned the bayonet ring of the standard eyepiece slightly to the left and having removed the eyepiece. Care has to be taken that the smallest pin of the auto-collimation eyepiece engages exactly in the corresponding notch in the eyepiece mount. Between the eyepiece lenses and the reticle there is a beam splitter aligned at an angle of 45° to the line of sight. A plug-in lamp which has to be connected to the battery box is inserted into the auto-collimation eyepiece from below.

  The image of the crosslines reflected back into the telescope from the mirror target is only visible if the telescope is focused to infinity.

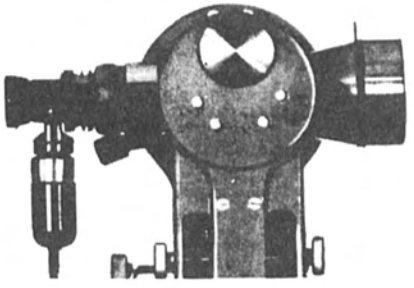

Fig. 3.13 Autocollimation Eyepiece GOA 2

- <u>The parallel plate micrometer</u> (fig. 3.14) is fitted to the front of the telescope. The mounting has two notches , at 90° to each, by means of which the micrometer is positioned to measure displacements in either the horizontal or the vertical plane. The range is 5 mm on either side of the telescope's line of sight. Direct reading is possible to 0.2 mm and estimation goes down to 0.05 mm.

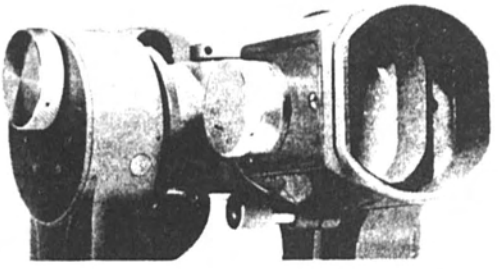

Fig. 3.14 Wild T2 with Parallel Plate Micrometer GPM2 and counterweight.

- <u>The zenith eyepiece</u> (fig. 3.15) permits reading around zenith position. The reading eyepiece is unscrewed and the diagonal zenith eyepiece is slipped into the tube and clamped by means of a small lever. After transitting the diagonal eyepiece can be rotated through 180°.

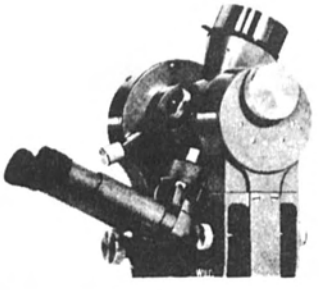

Fig. 3.15 Diagonal Eyepieces or sighting to the zenith.

- <u>An electric illumination set</u> (fig. 3.16) consists of a metal battery box with accessories. The box holds six dry cells. The three

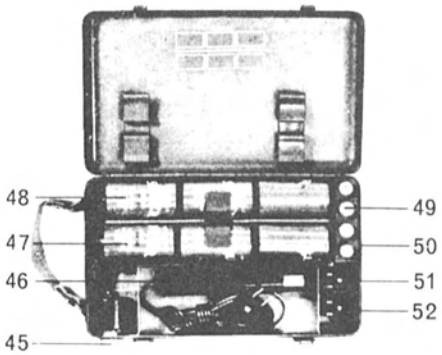

Fig. 17 Battery Box

45 Switch and rheostat knob for regulating instrument illumination
46 Handlamp with cable
47 3 batteries in the circuit
48 3 spare batteries
49 Spare bulbs
50 Push button for sliding cover protecting the sockets
51 Socket for handlamp, autocollimation eyepiece or eyepiece lamp
52 Socket for instrument illumination

Fig. 3.16 Battery Box

inner ones are connected in series with the switch and plug sockets. The three outer ones are spares. Also contained in the box are connection cable, four reserve bulbs and a handlamp. The switch serves as a variable rheostat for regulating the brightness of the bulbs.

The sockets of the battery box are protected by a sliding cover. The outer socket is controlled by the rheostat.

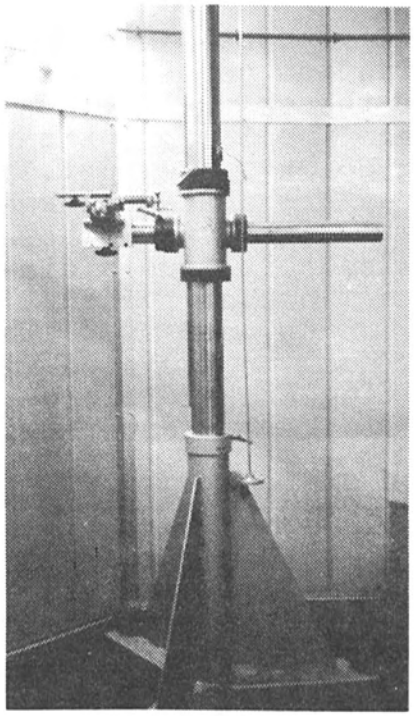

- The heavy duty stand shown in fig. 3.17 takes the theodolite on a table with crossed slides. The stroke of the slides is ± 50 mm. The table can be lifted from 1.4 m to about 2.8 m height.

Fig. 3.17 Heavy duty stand

3.5. Targets and target holders

- All targets available have an outer diameter of 2 1/4 inch or 57,132-57,148 mm. The target pattern is either a crossline framed in a steel ring or a pattern as shown in fig. 3.18 with metric

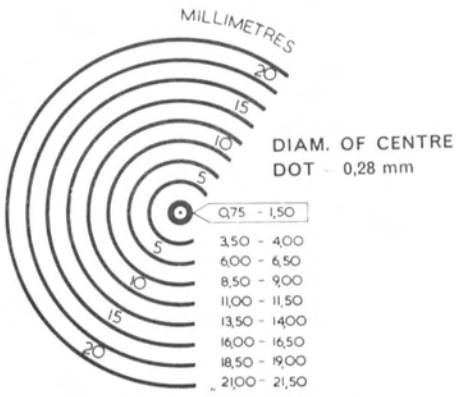

Fig. 3.18 Standard Circular Pattern.

scale. The latter pattern is only used for direct viewing because the parallelism of the glass plate which holds the pattern is 20 arc sec. Same targets are available with mirror surface. They have to be located against the front face.

The circular target patterns are concentric to their outer diameter within 0.0064 mm. Their thicknes is 0.5 inch or 12,45-12,95 mm.

- The target holders exist in different forms and cover a big variety of utilisation cases. Mainly for the cross-lines targets and for installation in big holes two spider fixtures are available similar to fig. 3.19. They are extendable from a diameter of 16 inch to 681/2 inch (405 to 1680 mm). The spider can be equipped with a rotating arm and micrometer clock for centering.

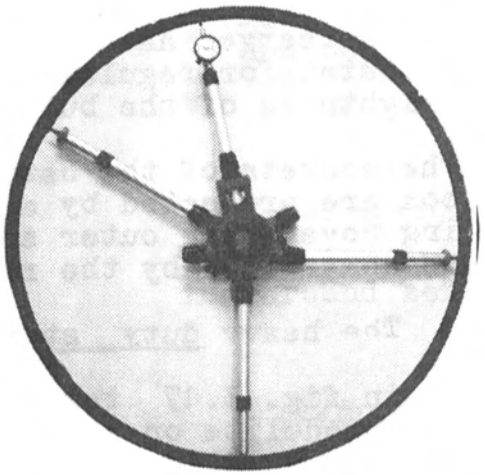

Fig. 3.19 Spider Fixture

Several mounting spheres (fig. 3.20) can take all targets mentioned above. They can be equipped with target illuminators (fig. 3.21) with 220 V lamps

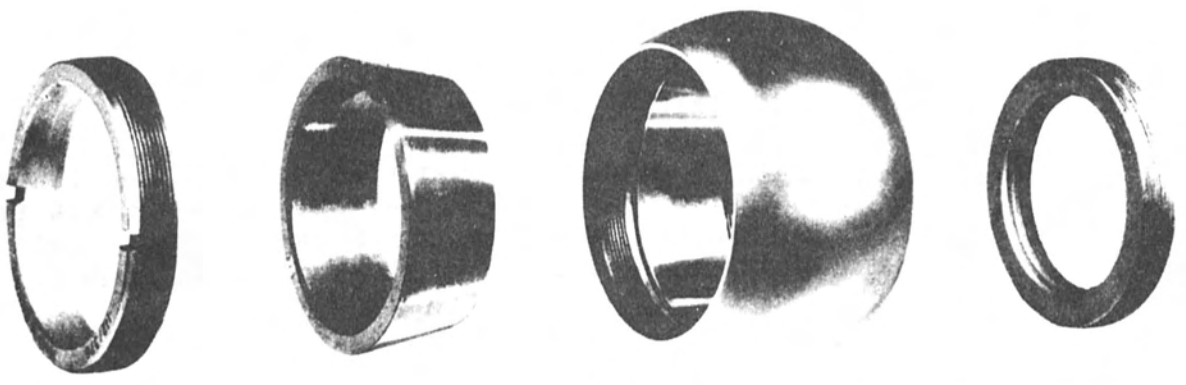

Fig. 3.20 Mounting Sphere showing (left to right): collet clamp ring, collet, body, shoulder ring.

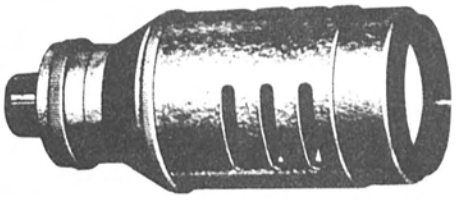

Fig. 3.21 Target Illuminator

and fixed to flange cups as shown in fig. 3.22.

A target frame (fig. 3.23) with magnetic feet can also be equipped with all targets abd the illuminator, whilst the adjustable target holder (fig. 3.24) can be tilted about two perpendicular axes but cannot take the illumination. It is located with a 3.75 inch (95,25 mm) spigot in the corresponding structure.

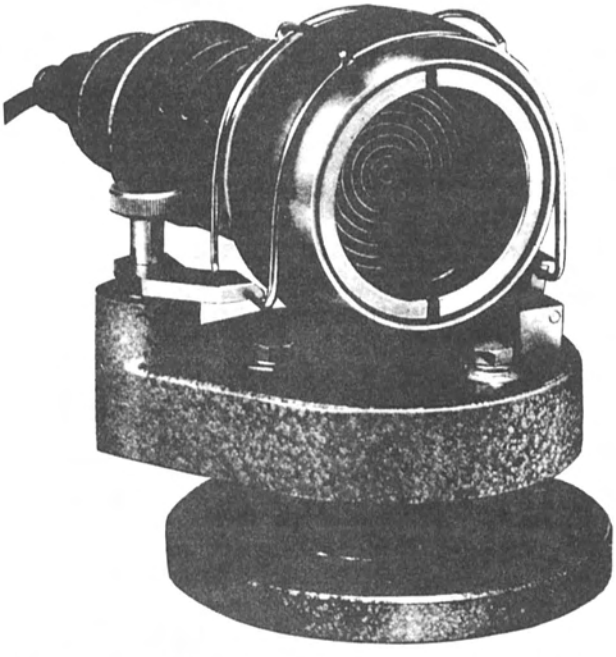

Fig. 3.22 Sphere Clamp holding Sphere onto Flange Cup.

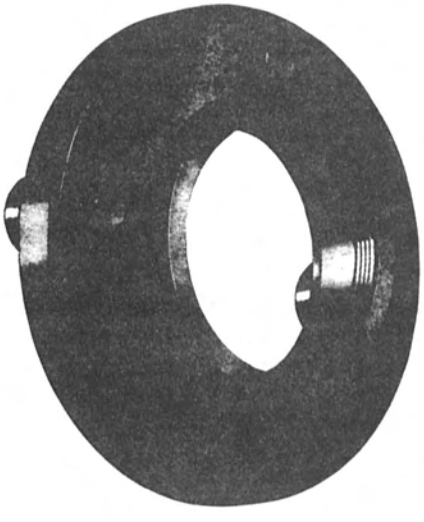

Fig. 3.23 Magnetic Target Frame

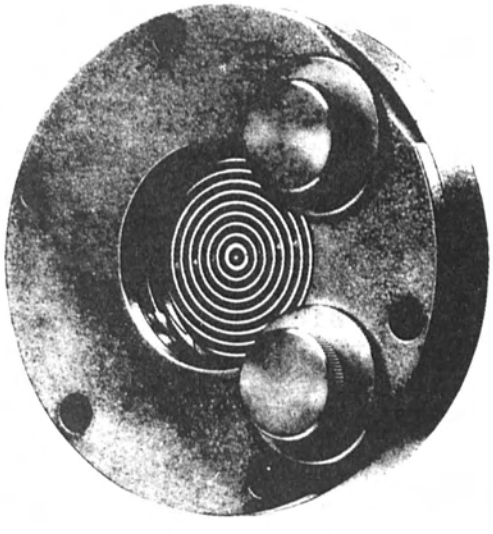

Fig. 3.24 Adjustable Mirror Target Holder

4. Alignment procedures

In this chapter the fundamental alignment procedures and possibilities are described which are necessary to set the telescope structure according to the optical requirements.

4.1. Instrument pole

The pedestal of the telescope rests on three feet- one at the north end and two in the south. All three feet are adjustable in height. But it is only the north foot which is used for alignment of the telescope pole in height.

For displacement work the two safety screws on both sides of the pedestal's north end have to be loosened and with two 100 ton hydraulic jacks one has to lift the pedestal slightly by placing the jacks under the structure close to the safety screws.

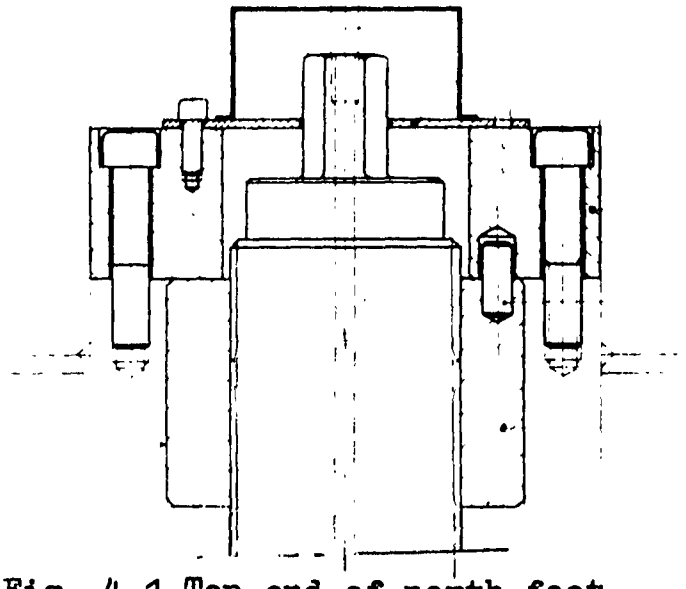

Fig. 4.1 Top end of north foot

According to the calculated value one has to change the length of the foot by turning the screw which is accessable inside the big central tube of the pedestal.

The screw is secured against rotation by a flange cup (see fig. 4.1) and has a hexagon head of 46 mm width. One turn corresponds to 6 mm displacement. After adjustment the safety screws have to be retightened.

Whilst the north foot permits only displacements along its axis and rotations about it the two south feet also can be moved sideways. A number of push-pull screws underneath the pedestal and located half-way between the south feet are foreseen for these adjustments of the instrument pole in azimuth.

Attention! do not loosen the push-pull screws for big amounts because the north feet have a built in spacer in unstable position to permit the lateral displacement. Ensure that the telescope pedestal follows when you loosen one side of the screw set. Otherwise you have to push from the other side.

The pedestal should not be moved for more than 5 mm in both directions. (Check on push-pull system!).

4.2 Perpendicularity of alpha and delta axis

The first operation is to install targets in the centers of the two axes.

For declinationone can use the spider fixtures (fig. 3.19) which are placed in the holes hidden behind a cover on the inner diameter of the center pieces.

The sighting telescope is installed with the bore fixture and a triangular support on the west of the telescope part as shown in fig. 4.2.

To center the targetsone has to follow the instructions of chapter 2.5.

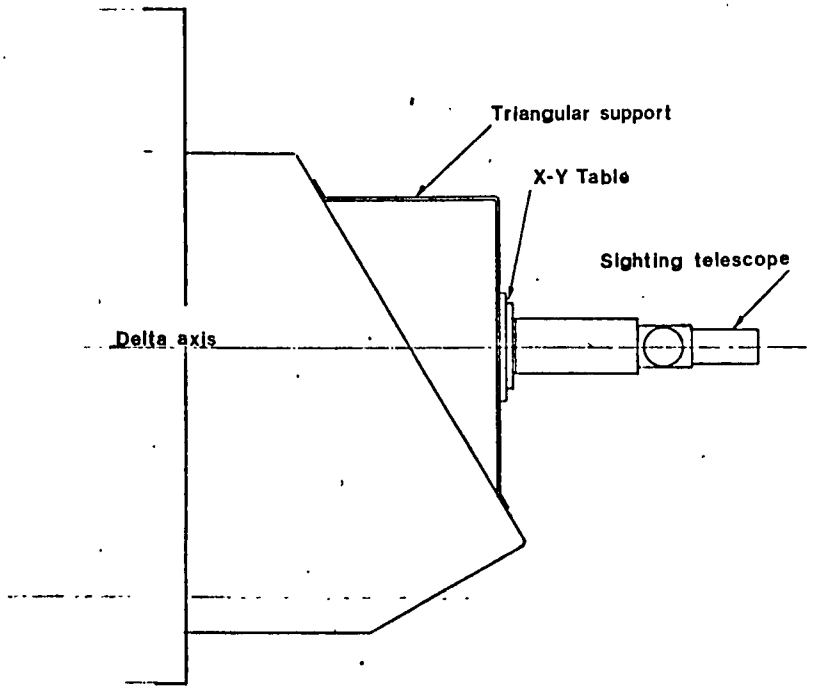

Fig. 4.2

The targets of the polar axis are already placed on the cross-beam and on the northend. In the mirror 5 point the theodolite has to be installed using the heavy duty stand. The theodolite should be equipped with the standard eyepiece and the parallel plate micrometer.

To center the targets one has to follow the instructions of chapter 2.5.

It is now necessary to align the two instruments (the sighting telescope and the theodolite) to their two corresponding targets. Thus one has installed a right angle line of sight passing through the center of alpha and delta axis.

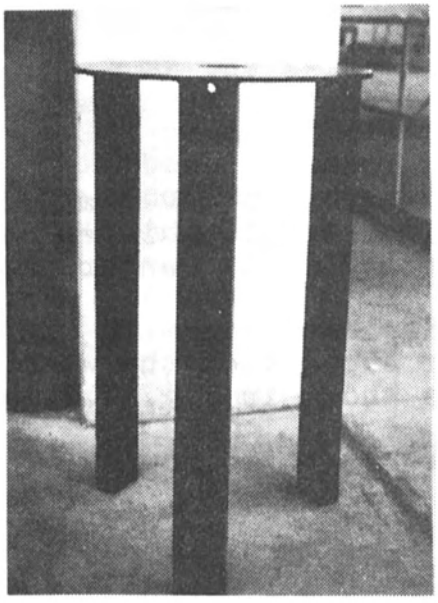

4.3 Pentaprism support

To check this angle the base of mirror 3 has to be demounted and replaced by the pentaprism support shown in fig. 4.3.

The pentaprism is fixed to the support as indicated in fig. 4.4. This configuration permits an adjustment in height by simply displacing the pentaprism adapter up and down.

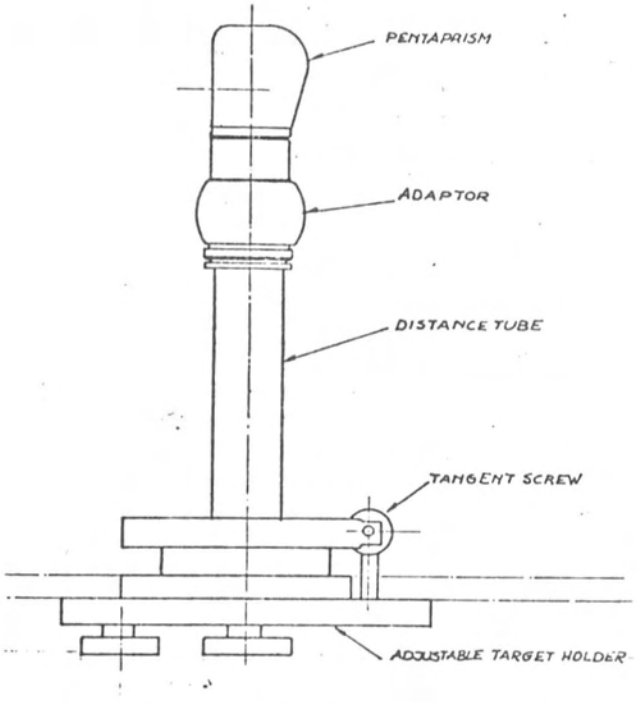

Fig. 4.4 Pentaprism mouting

- a fine rotation about the reticle axis by means of the target screw.

- A tilt using the screws of the adjustable target holder.

Looking through the sighting telescope one has to adjust the height of the pentaprism to be more or less centered to the exit aperture.

The 3.6 m telescope tube has now to be brought into pole position. By placing

a small but good quality mirror onto the straight through exit of the pentaprism and equipping the theodolite for auto-collimation one can align the pentaprism to be perpendicular to the polar axis using the tilt screws of the adjustable target holder.

Looking through the right angle exit the pentaprism is now rotated roughly to set the front target of the sighting telescope onto the horizontal line of the crosslines of the theodolite. For centering the target in the horizontal direction one has to change the height of the pentaprism (lifting the pentaprism means the target image moves to the right).

With a transparent scale placed on the right angle exit of the pentaprism one defines the distance between alpha and delta axis by looking through the two sighting instruments. The pentaprism has then to be rotated again to show the target of the sighting telescope displaced downwards in the eyepiece of the theodolite. The displacement value corresponding to the distance of the axes can be read on a millimeter scale placed in front of the sighting telescope.

After an additional check of the position of the pentaprism through the above mentioned auto-collimation procedure one has to equip the sighting telescope with the lamphouse and focus it to infinity thus converting it into a collimator.

Focusing the theodolite to infinity and using its standard eyepiece the sighting telescope crosslines will appear on the vertical line of the theodolite crosslines under the condition that alpha and delta axes are perpendicular. The tolerance for lateral deviation is $\pm$ 6 mm which corresponds to $\pm$ 1 arc min with a distance between theodolite and sighting telescope-collimator of about 20 meters.

If the measured value is higher one has to tilt the delta axis by adjusting the hydrostatic pads. For this work see maintenance manual 1 and 7.

4.3. Perpendicularity of delta-and tube axis

The tube axis is defined only by the optics of the 3.6 m telescope and has therefore no real mechanical center. Special procedures are necessary for setting the optical axis perpendicular to the delta axis.

It would go too far to indicate these procedures within this manual. A separate manual on the alignment of the optics will give the details.

4.4. Mirror and top units

The following chapter explains the alignment facilities which exist to displace or rotate the five mirrors which form the optics of the 3.6 m telescope.

But first a general remark: all mirrors cannot be displaced in one way or other inside their cells. The geometry of the configuration mirror-cell is therefore invariable.

All alignment facilities are installed in the mechanical part between the cell and the fixation to the telescope.

The main mirror cell can be tilted through about ± 3 arc min. This is done by turning the fixation nuts of the six flexion bars on top of the center section.

According to the tilt direction one has either to undo 2 nuts and to lift the others 2 on opposite side or three nuts on one side down and three nuts up. The displacement has to be calculated beforehand and checked by micrometer clocks.

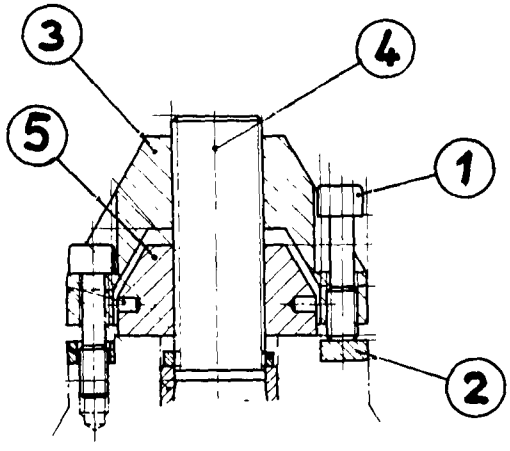

Fig. 4.5 Nut system of Flexion Bars.

To turn the nuts one has to undo first the 4 screws (1) in fig. 4.5 (left side) till the ring (2) is free. By turning the counter-nut (3) through 45° one can turn down the 4 screws (1) again and thus lift the bolt (4) of the flexion bar. (fig. 4.5 right side).

According to the direction one has to mount or to descend the nut (5) and to loosen the screws (1) and after returning them through 45° they have to be screwed into the center section to block the counter-nut.

Attention! displacement steps should be very small, because the flexion bars are rigidly fixed to the main cell. Displacements of more than 0.3 mm on one bar could cause serious deformations.

There is no possibility given to displace the main mirror cell laterally.

- The top units however have been equipped with this facility. The spider fixation in the top-ring permits lateral displacements of ± 5 mm. According to the direction one has to release or tighten two times two opposite screws (1) as shown in fig. 4.6. These screws are mounted under preload. It is therefore necessary to tighten the nuts (2) through the same angle as the opposite ones were loosened.

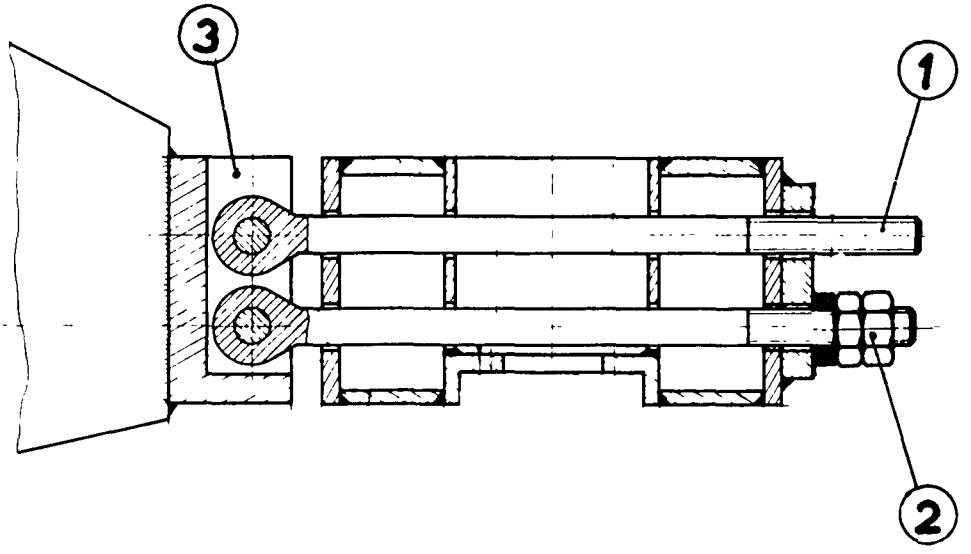

Fig. 4.6 Alignment screws on topring

A slight tilt of the top unit is also possible by turning the screws (1) in fig. 4.7 which are fixed to the spider piece (3) in fig. 4.6 and 4.7.

- The secondary mirror cells (Coudé and Cassegrain) are fixed to the top-units through a drive system which allows longitudinal displacement (focussing) and tilting (collimation). As these movements are motorised no further description is necessary.

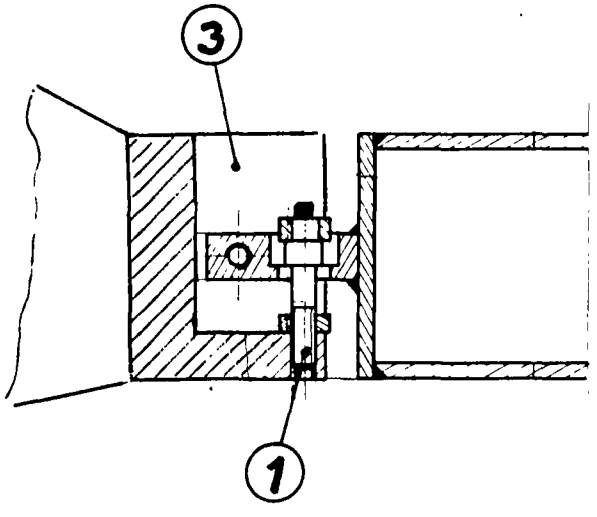

- The cells of mirrors 3 and 4 are also equipped with motorised three point fixations to the telescope structure. Longitudinal displacements and tilting is possible.

Fig. 4.7 Tilt screws on top-ring

- The mirror 5 configuration in itself works like an alt-azimuth mounting and permits corrections in tilt and rotation about the vertical axis.

5. Maintenance instructions

5.1. Change and adjust lamp of telescope lamp-house

It is essential that only the correct lamp (code 613/48 Rank Precision Industries Ltd. Leicester, England) should be used with the lamphouse. To replace the lamp, remove the cover by withdrawing the four radial screws at least 1/8 inch and then unscrew the lampholder assembly. If the radial screws are not withdrawn sufficiently, they will foul the lamp when the lampholder is removed or inserted.

Note that the lampholder is insulated from its mounting and is supplied with current via the radial screws. Therefore, the lamp will not light until one of the radial screws has been screwed up to make contact.

After replacement of the lamp reassemble the cover and insert the lamphouse into the telescope. Operate the slide to remove the green filter from the light path. Place a piece of white card about 40 cm in front of the telescope and by turning the focussing knob focus an image of the crosslines onto the card.

Next rotate the knurled ring on the lamp-house to bring the lamp filament into sharp focus and use the focus adjusting screws to center the image of the lamp on the crosslines. Turn the knurled ring to the stop position to diffuse the image of the filaments and the lamp is now set to give maximum illumination.

5.2. Replacement of Collimator lamp

To replace the lamp, undo the two knurled screws in the lamphouse, at the same time holding the cap down against the spring pressure. Remove the cap, replace the lamp and re-assemble, making sure that the pin is located in the hole in the cap. No focussing is necessary.

Replacement lamp 12 V, 4 Watt (Code 104/122 Rank Precision Industries Ltd., Leicester , England).

5.3. To Check and Adjust the Vial of the Stride Level

The accuracy of the vial can be checked by setting the telescope, equipped with the level, horizontal and unclamping the level and reversing it end for end without disturbing the position of the telescope. The images should again be coincident. If not, the error can be corrected as follows:

Take up half the error by means of the telescope height adjustment screw on the adjusting bracket. Take up the remainder by turning the capstan underneath the level, using a cranked tommy bar. Reverse the level and re-check; if necessary eliminate any residual error in the same way.

If the two images of the bubble do not form a completely circular curve when they are in coincidence, the vial is skewed in the mount and its axis is not parallel to the telescope axis. To correct this, adjust the upper one of the two screws by the side of the window, below the circular level. Do not attempt to adjust the lower screw.

A N N E X

Angle	mm per Metre
1 sec	0,005
2 sec	0,01
3 sec	0,015
4 sec	0,02
5 sec	0,025
6 sec	0,03
7 sec	0,035
8 sec	0,04
9 sec	0,045
10 sec	0,05
20 sec	0,10
30 sec	0,15
40 sec	0,20
50 sec	0,25
1 min	0,30
2 min	0,60
3 min	0,90
4 min	1,20
5 min	1,50
6 min	1,80
7 min	2,10
8 min	2,40
9 min	2,70
10 min	3,0
30 min	9,0
1 deg	17,5

Table I Angles expressed as gradients

Distance	Field of View
Metres	Standard eyepiece
	mm
0,3	18
0,6	25
0,9	30
1,2	38
1,5	43
1,8	48
2,1	53
2,4	61
2,7	69
3,0	74

Table II Field of view of sighting telescope for distances up to 3 m.

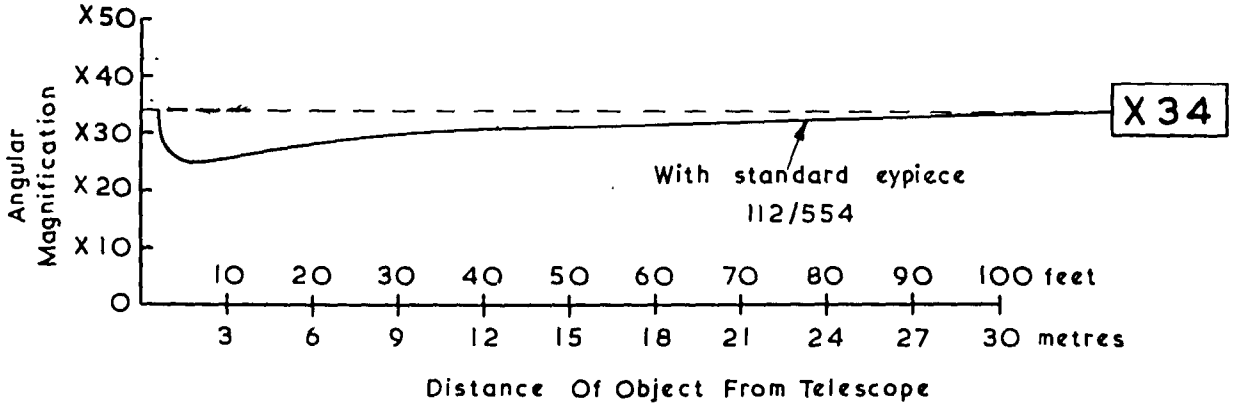

Chart I Overall magnification of sighting telescope

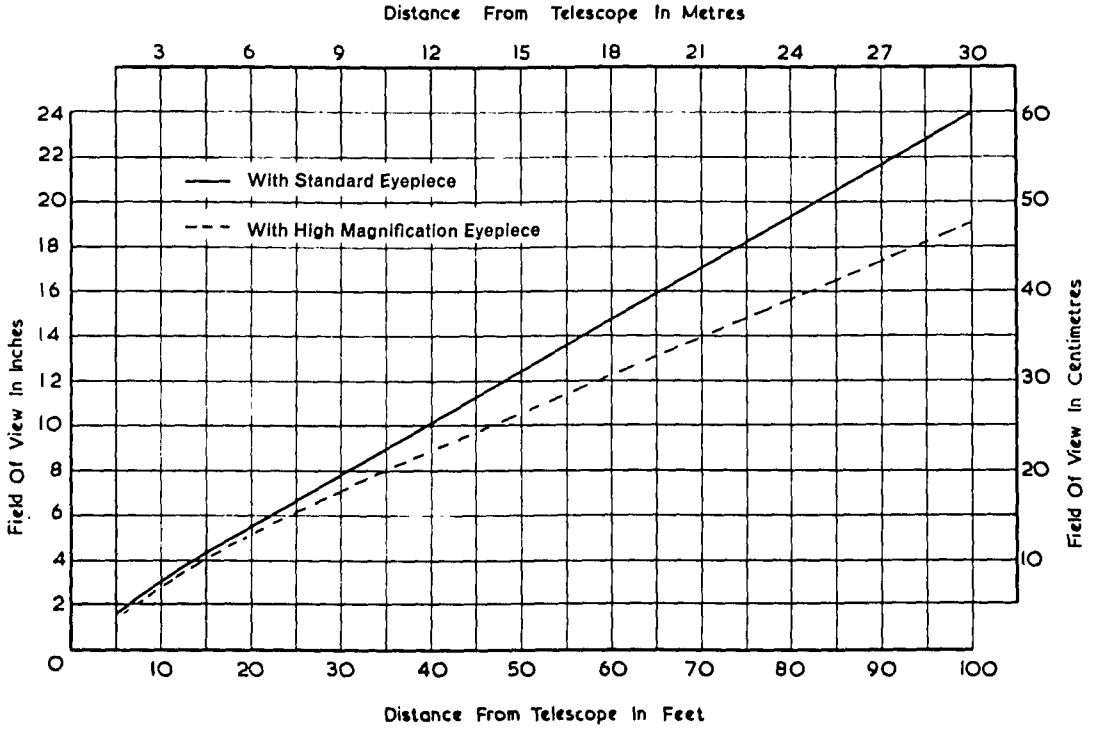

Chart II Field of view of sighting telescope for distances over 3 meters.