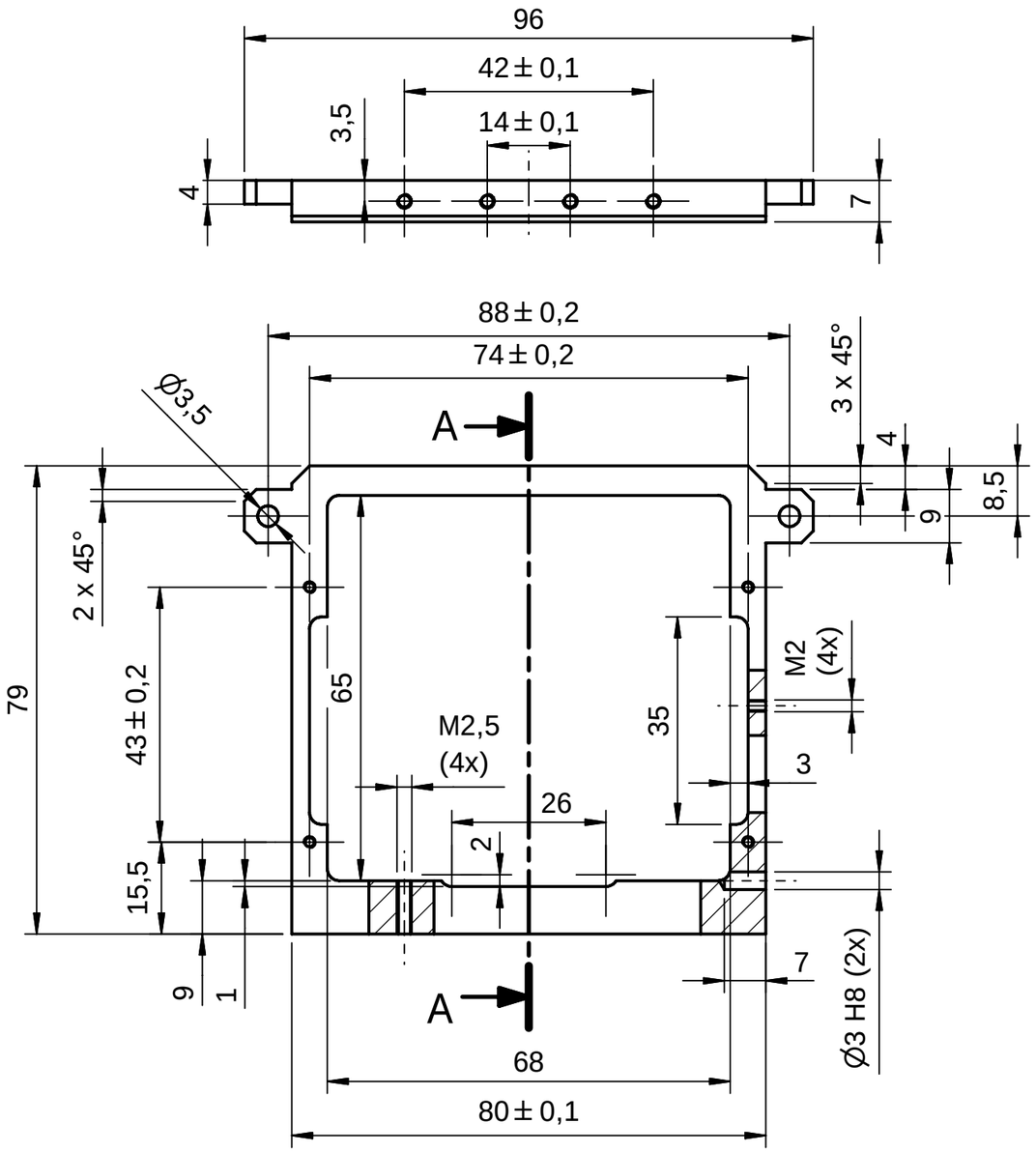

A-A (1 : 1)

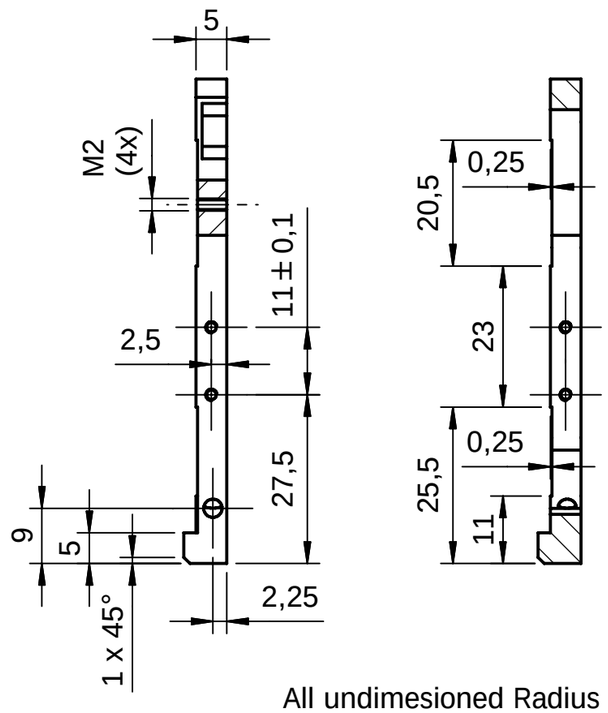

ISO

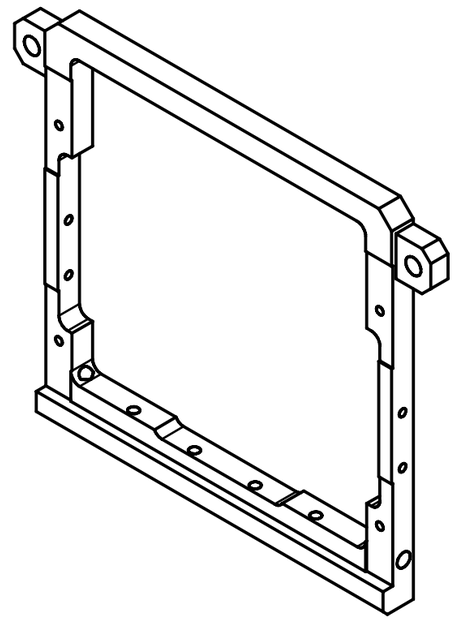

All undimesioned Radius = R2

Filename: VLT-ESO-14850-0-131000-0003.idw			Part Revision Number :	0
			Drawing Revision Number :	0
Material: AlMg3 (5754)	Surface: black anodized	Edges: deburred	Roughness: Ra 3,2	Weight: 0.02 kg
VLT PROJECT	General Tolerances(mm): DIN ISO 2768 m/K	Scale: 1:1	Project/Product Item: 14850	WP 885
EUROPEAN SOUTHERN OBSERVATORY Karl-Schwarzschild Str. 2 D-85748 Garching bei München www.eso.org	Date: / Name: Drawn: 23.01.2008 fnittel Designed: 30/01/2007 rconzelm Checked: 23/01/2008 Status:		Description: Analog Board Frame	
Copyright reserved acc. ISO 16016			Drawing Number: VLT-DWG-ESO-14850-0-131000-0003	Sheet 1 of Sheets 1

A3