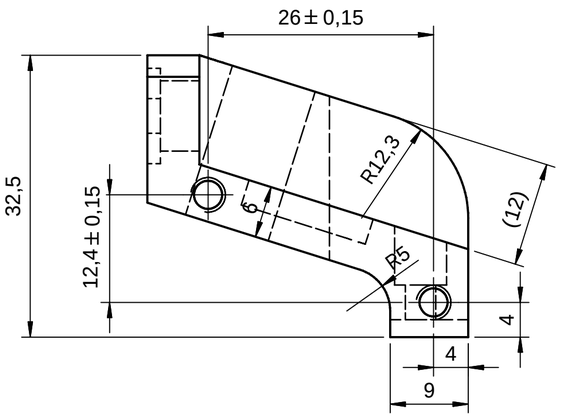

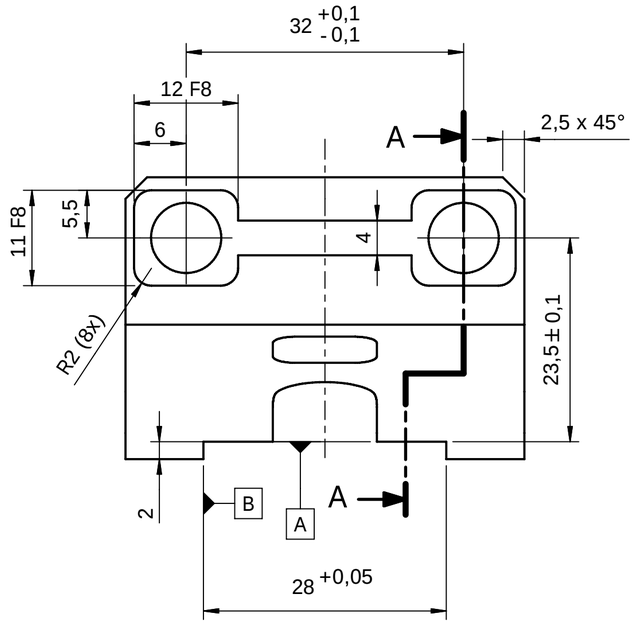

A-A (2 : 1)

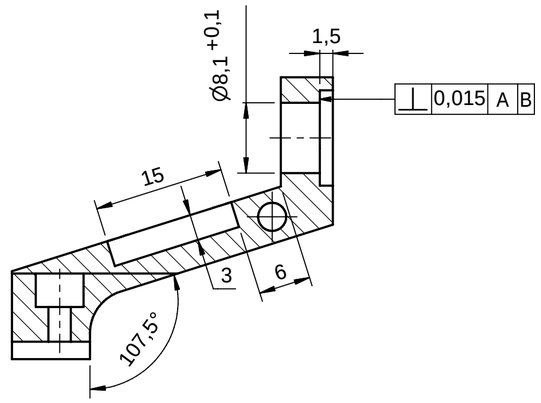

C-C (2 : 1)

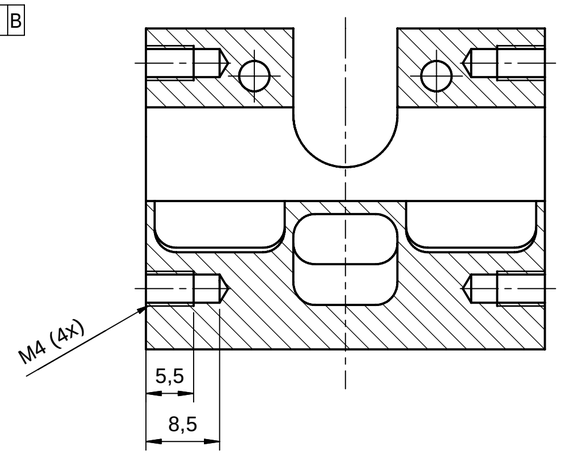

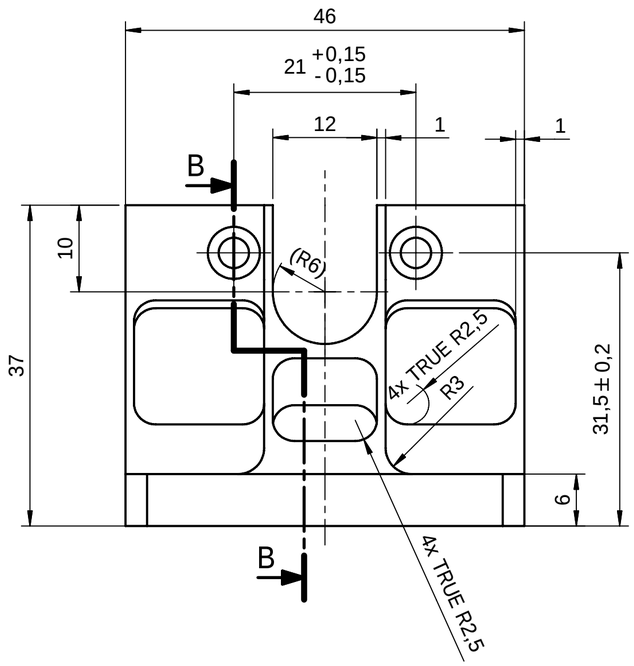

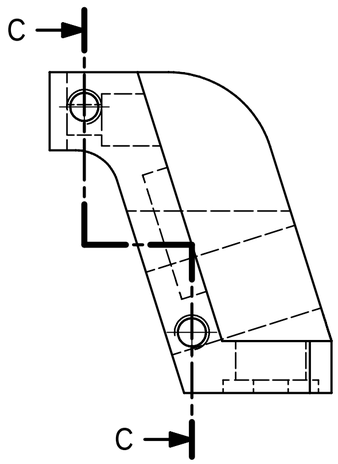

B-B (2 : 1)

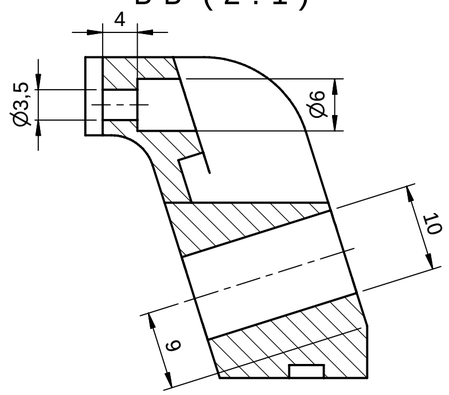

ISO 1

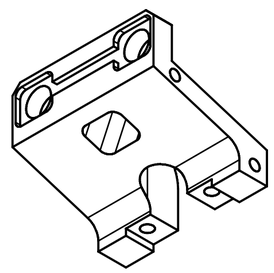

ISO

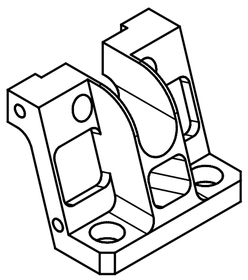

Filename: VLT-ESO-14850-0-131000-0015.idw			Part Revision Number : 0	
			Drawing Revision Number : 0	
Material: AlZnMgCu1,5-F48 (7075)	Surface: black anodized	Edges: Deburred	Roughness: Ra 3,2	Weight: 0.03 kg
VLT PROJECT	General Tolerances(mm): DIN ISO 2768 -m/K	Scale: 2:1	Project/Product Item: 14850	WP 885
	Date: / Name:		Description:	
	Drawn: 21.02.2008 fnittel		Support	
	Designed: 17/01/2008 rconzelman			
	Checked:			
	Status:			
EUROPEAN SOUTHERN OBSERVATORY, Karl-Schwarzschild Str. 2, D-85748 Garching bei München, www.eso.org	Drawing Number: VLT-DWG-ESO-14850-0-131000-0015			Sheet 1 of Sheets 1

Copyright reserved acc. ISO 16016

A2